INLINE AND RIGHT ANGLE GEARBOXES

AND

MECHANICAL VARIABLE SPEED DRIVES

MANUFACTURED AND BUILT IN GREAT BRITAIN

DISCO DRIVES (KING'S LYNN) LIMITED
OLDMEDOW ROAD, HARDWICK INDUSTRIAL ESTATE, KING'S LYNN, NORFOLK,
ENGLAND. PE30 4LE
REG. NO. 2993740

INTENTIONALLY LEFT BLANK

INTENTIONALLY LEFT BLANK

Table of Contents

1. GENERAL INFORMATION 6
GENERAL INFORMATION 7
MOTOR RATINGS 8
UNIT RANGE 9
OVERHUNG LOADS 16
DISCO MECHANICAL VARIABLE SPEED DRIVE UNIT. 19
2. INLINE GEARBOXES 22
MOUNTING POSITIONS 23
OVERHUNG LOADS 24
THRUST LOADS (AWAY) 25
THRUST LOADS (TOWARDS) 26
SINGLE REDUCTION FEET ON MOTOR DIMENSIONS 27
SINGLE REDUCTION FLANGE MOUNTED DIMENSIONS 28
DOUBLE/TRIPLE REDUCTION FOOT MOUNTED DIMENSIONS 29
DOUBLE/TRIPLE REDUCTION FLANGE MOUNTED DIMENSIONS 30
SINGLE – DOUBLE/TRIPLE COMPOUND FOOT MOUNTED DIMENSIONS 31
SINGLE – DOUBLE/TRIPLE COMPOUND FLANGE MOUNTED DIMENSIONS 32
DOUBLE/TRIPLE - DOUBLE/TRIPLE COMPOUND FOOT MOUNTED DIMENSIONS 33
DOUBLE/TRIPLE - DOUBLE/TRIPLE COMPOUND FLANGE MOUNTED DIMENSIONS 34
INPUT FLANGE AND SHAFT DIMENSIONS 35
MAXIMUM BORE SIZES FOR FIRST PINIONS 36
ADDITIONAL INFORMATION 37
3. RIGHT ANGLE GEARBOXES 38
ESR 9, 10 AND 11 MOUNTING POSITIONS 39
ERA33 AND 44 MOUNTING POSITIONS 40
OVERHUNG LOADS (N) 41
MAXIMUM TRUST LOADS (N) 41
ESR9, 10 & 11 FEET ON MOTOR DIMENSIONS 42
ESR9, 10 & 11 FEET ON GEARBOX DIMENSION 43
ESR9, 10 AND 11 FLANGE DIMENSION SHEET 44
ERA33 AND 44 FOOT DIMENSION SHEET 45
ERA33 AND 44 FLANGE DIMENSION SHEET 46
4. CONTRA-ROTATING INLINE GEARBOXES 48
MOUNTING POSITIONS 49
CONTRA-ROTATING CO-AXIAL SHAFT GEARBOXES 50
OUTPUT SPEEDS AND TORQUE (BOTH SHAFT SAME SPEED) 51
OUTPUT SPEEDS AND TORQUE (OUTER SHAFT HALF SPEED) 52
FOOT MOUNTED DIMENSIONS 53
FLANGE MOUNTED DIMENSIONS 54
5. DISCO MECHANICAL VARIABLE SPEED UNITS 56
MOUNTING POSITIONS 57
INTRODUCTION 58
PRINCIPLE OF OPERATION 59
TECHNICAL DATA 60
UNIT SELECTION 62
RATING AND SELECTION TABLE STANDARD DISCO UNITS 63
MOTORISED FOOT MOUNTING UNIT A-B5/A TYPE 64
MOTORISED FLANGE MOUNTING UNIT F-B5/A TYPE 65
NON-MOTORISED FOOT MOUNTING UNIT A TYPE 66
NON-MOTORISED FLANGE MOUNTING UNIT F TYPE 67
DISCO DIFFERENTIAL VARIABLE SPEED UNITS 68

RATING AND SELECTION TABLE DISCO DIFFERENTIAL UNITS 69
MOTORISED FOOT MOUNTING DIFFERENTIAL UNIT ADD-B5/A TYPE 70
MOTORISED FLANGE MOUNTING DIFFERENTIAL UNIT FDD-B5/A TYPE 71
NON-MOTORISED FOOT MOUNTING DIFFERENTIAL UNIT ADD TYPE 72
NON-MOTORISED FLANGE MOUNTING DIFFERENTIAL UNIT FDD TYPE 73
6. PARTS CATALOGUES 74
ESR50-45 BREAKDOWN 75
ESR50 76
ESR00 77
ESR1 78
ESR2 79
ESR3 80
ESR35 81
ESR4 82
ESR4SS 83
ESR425 85
ESR45 86
ESR6-8 BREAKDOWN 87
ESR6 88
ESR7 88
ESR8 89
ESR9-11 BREAKDOWN 90
ESR9 91
ESR10 92
ESR11 93
ERA33-44 BREAKDOWN 94
ERA33 95
ERA44 96
ECR1-45 BREAKDOWN 97
ECR1-45 98
DISCO MECHANICAL VARIABLE SPEED DRIVE BREAKDOWN 99
DISCO MECHANICAL VARIABLE SPEED DRIVE 100
7. GEARBOX RATIOS 102
ESR50 103
ESR00 104
ESR1 105
ESR2 106
ESR3 107
ESR35 108
ESR4 109
ESR4SS 110
ESR425 112
ESR45 116
ESR6 120
ESR8 120
ESR9 120
ESR10 120
ERA33 121
ERA44 122
ECR1 123
ECR2 124
ECR3 125
ECR35 126

ECR4 127
ECR425 128
ECR45 131
8. SERVICE FACTORS 134
ESR50 136
ESR00 137
ESR1 138
ESR2 139
ESR3 140
ESR35 141
ESR4 142
ESR4SS 143
ESR425 144
ERS45 145
ESR6 146
ESR9 147
ERA33 148
ERA44 149
TYPICAL LOAD CLASSIFICATIONS 150

1. GENERAL INFORMATION

GENERAL INFORMATION

ALL DIMENSIONS IN THIS CATALOGUE ARE IN METRIC UNLESS STATED OTHERWISE.

Our units are built to Imperial dimensions which have been translated to metric dimensions. All the gear case castings are poured and machined in England with all the internals being machined on site, in King's Lynn, with final assembly also taking place on site in King's Lynn. This makes our Gearboxes truly "Made in Britain".

Gear cases are generally made from Grey Cast Iron BS1452 grade 220.

Gears and shafts are made from high tensile Alloy Steel, heat treated where required. Bearings are Deep Grove Ball or Taper Roller. Heavy duty Spherical Roller output bearings are available on ESR1 to ESR3 on request, to increase overhung load capacity and are fitted as standard in the ESR35 to ESR45 and ERA44

The preferred lubrication is by oil although on the units up to and including ESR3 and ESR6 to ESR11 can be grease lubricated. Units are normally supplied **without** lubrication, although this can be provided at additional charge on request.

All units except ESR6 to ESR11 can be fitted with an internal backstop, at extra cost, to prevent the unit from reversing. This must be stated on order as this cannot be retrofitted.

Special shafts can be supplied at extra cost for all units, changes in length, diameter and material can all be accommodated. Double oil seals are fitted on all units mounted vertical shaft down in ESR/ECR35/4/4SS/425/45. High temperature Viton seals can also be fitted on request.

Maintenance – periodic changes of the lubricant at recommended intervals and regular checks for lubricant level and that the breather remains clear are all that are needed. Transparent level plugs are available on request.

On installation ensure that correct lubricant and quantities are used and that the unit is fit for purpose. A tapped hole is supplied in the end of the shaft to assist in the fitment and removal of drive couplings. If a pulley or sprocket are used on the output shaft ensure they are positioned as close to the gear case as possible, to reduce overhung load on the output bearing.

Our gearboxes can be fitted with any type of motor, AC, DC, hydraulic or pneumatic. Electro-magnetic/Pneumatic Clutch Brakes, Eddy Current, Belt or **Disco Variable Speed Drive** can also be supplied and fitted, the latter, **Disco Variable Speed Drive,** are also manufactured by ourselves. All our units are Metric IEC or NEMA Input compatible and either fit direct or with the use of adaptor plates. All mounted drives must be fitted with an oil seal on the input shaft as all our gearboxes are wet gearboxes. All our units can also be fitted with input flange and shaft.

When ordering the following information is required: -

If this is a replacement gearbox a previous serial number would be advantageous. *If you believe your unit to be 1973 or older then the output shaft dimensions may have changed due to the switch from the Imperial to the Metric measurement system so confirmation maybe required.*

Gearhead only

Unit type:	from our unit range. *i.e. ESR1*
Mounting type:	foot, flange or feet on motor *(not available in all units)*
Mounting position:	the format can vary from unit to unit

i.e. 116.8/1. Some units have had slight changes in their ratios over the years due to the change from DP gear teeth to Modular gear teeth.

Input:	*i.e. D71.* All our units take a flange mounting input (B5)

Geared Motor

Unit type:	from our unit range. *i.e. ESR1*
Mounting type:	foot, flange or feet on motor *(not available in all units)*
Mounting position:	the format can vary from unit to unit
Output speed:	*i.e. 12 RPM*
Motor details:	*i.e. 0.55kW AC 230/400/3/50 4POLE (1500 RPM)*

MOTOR RATINGS

kW	3PHASE AC				SINGLE PHASE CAP START,			DC PERMANENT MAGNET			
RATING	2 POLE	4 POLE	6 POLE	8 POLE	2 POLE	4 POLE	6 POLE	IP22	IP44	IP22	IP44
	3000 RPM	1500 RPM	1000 RPM	750 RPM	3000 RPM	1500 RPM	1000 RPM	2000 RPM	2000 RPM	2000 RPM	2000 RPM
0.09			D71		D63	D63					
0.12		D80	D71		D63	D71		714A	714A	714A	714A
0.18	D63	D63	D71	D80	D71	D71		714A	714A	714A	714A
0.25	D63	D63	D71	D80	D71	D71		714A	714C	714A	714A
0.37	D71	D71	D80	D90S	D71	D80	D90S	714C	805C	714A	714C
0.55	D71	D80	D80	D90L	D80	D80	D90L	805C	805E	714C	805C
0.75	D80	D80	D90S	D100L	D80	D90S	D100L	805E	907E	805C	805E
1.1	D80	D90S	D90L	D100L	D90S	D90L	D100L	907E		805G	907B
1.5	D90S	D90L	D100L	D112M	D90L	D100L				907E	907E
2.2	D90L	D100L	D112M	D132S	D100L	D100L				907E	
3	D100L	D100L	D132S	D132M							
4	D112M	D112M	D132M	D160M							
5.5	D132S	D132S	D132M	D160M							
7.5	D132S	D132M	D160M	D160L							
11	D160M	D160M	D160L	D180L							
15	D160M	D160L	D180L	D200L							
18.5	D160L	D180M	D200L	D225S							
22	D180M	D180L	D200L	D225M							
30	D200L	D200L	D225M	D250S							
37	D200L	D225S	D250S	D250M							
45	D225M	D225M	D250M	D280S							
55	D250S	D250S	D280S	D280M							
75	D250M	D250M	D280M	D315S							
90	D280S	D280S	D315S	D315M							
110	D280M	D280M	D315M	D315L							
132	D315S	D315S	D315L								
150	D315M	D315M									
185	D315L	D315L									
200	D315L	D315L									
	STANDARD VOLTAGE				STANDARD VOLTAGE			STANDARD		STANDARD	
								ALL FRAMES		ALL FRAMES	
	D63-D100L		230/400		ALL FRAMES		230	180A		180A	
	D112M-D200L		400					FORM FACTOR 1.6		FORM FACTOR 1.05	
	D225-D315L		400								

AC MOTOR FRAME SIZES ARE BASED ON TEFV IP55 ENCLOSURES AND CONTINUOUS S1 DUTY

WOUND FIELD DC MACHINES ARE ALSO AVAILABLE.

ALL MOTORS MUST BE FITTED WITH AN OIL SEAL AT THE DRIVE END TO PREVENT LUBRICATING OIL OR GREASE FROM ENTERING THE MOTOR.

UNIT RANGE

Inline Gearboxes Single/Double/Triple Reduction Units

ESR50
ESR00
ESR1
ESR2
ESR3
ESR35
ESR4
ESR4SS
ESR425
ESR45
ESR6
ESR7
ESR8

Right Angle Single Reduction Units

ESR9
ESR10
ESR11

Right Angle Double Reduction Units

ERA33
ERA44

Contra-rotational Units

ECR1
ECR2
ECR3
ECR35
ECR4
ECR4SS
ECR425
ECR45

Disco Mechanical Variable Speed Units

03
04
15
24
26
36
46
48
04DD
15DD
24DD
26DD

LUBRICATION

OIL FOR EPG UNITS

Gearboxes are normally supplied with no oil and must be filled to the correct level before use. An oil level glass or marked plug is fitted in the appropriate position. If no mounting position is stated on order, unit will be supplied with level plug and breather positioned for B3 or V1 mounting. To prevent pressure build up units are normally supplied with breather plugs which must be kept clear and in uppermost position. Overfilling, high input speeds or incorrect lubricant may cause leakage through breather. Alternative breathers are available if required.

Oil in a new unit should be drained and replaced after first **500** hours of operation. Subsequent oil changes are recommended at **5000** hour or at **24** month intervals. Oil should be drained when warm and use of flushing oil is recommended especially at first oil change. A suitable flushing oil is **SHELL VITREA 22**. If synthetic lubricant is used oil changes may be increased to every **10000** hours or **48** months. **DO NOT** use flushing oil with synthetic lubricant.

The grades and approximate quantities of oil are given in tables provided. These apply for an ambient temperature range of **0°C to 40°C**. Where ambient temperature is outside this range please refer to manufacturer.

When units are compounded the higher viscosity oil should be used for all component gearboxes. Oil quantities can be obtained by treating component gearboxes as individual units.

E.g. **ESR13** compound gearbox

Primary gearbox **ESR1**	ISO VG460	1.7 liters
Secondary gearbox **ESR3**	ISO VG460	8.6 liters

Equivalent gear oil viscosity grades;

ISO grade	**SAE** grade	**AGMA** grade
220	EP90	5E
320	EP120	6E
460	EP140	7E
680	EP140	8E

Oil quantities EPG units

Gearbox	ISO Oil reference	Horizontal mounted Liters	Vertical mounted Liters
ESR50	220	0.43	0.49
ESR00	220	0.8	1
ESR1	220	1.7	2
ESR2	460	3.5	4.4
ESR3	460	8.6	9.7
ESR35	460	12.4	17.6
ESR4	460	20.5	25
ESR4SS	460	18.2	23.5
ESR425	680	52	66
ESR45	680	88.5	102
ESR6	220	0.36	0.43
ESR7	220	0.85	1.1
ESR8	460	1.45	2
ESR9	220	0.17	0.17
ESR10	460	0.43	0.43
ESR11	460	1	1
ERA33	460	3.5	V5 4.3 / V6 3.5
ERA44	460	4.5	5.7
ECR1	220	1.7	2
ECR2	460	3.5	4.4
ECR3	460	8.6	9.7
ECR35	460	12.4	17.6
ECR4	460	20.5	25
ECR425	680	52	66
ECR45	680	88.5	102

ERA44H, ESR4, ESR4SS, ESR425 and ESR45 gearboxes in V3 and V6 (shaft up) positions are fitted with a grease nipple for lubrication of top bearing. Re-lubrication should be every **2500** hours of operation or **6 months** with a NLGI 2 Molybdenum Disulfide grease (see table 9).

Oil manufacturers/suppliers recommended grades. Standard mineral and Synthetic.

Manufacturer/supplier	Oil type	ISO VG220	ISO VG460	ISO VG680
BP	Standard	ENERGOL GRXP220	ENERGOL GRXP460	ENERGOL GRXP680
CASTROL	Standard	ALPHA SP 220	ALPHA SP 460	ALPHA SP 680
CENTURY	Standard	CENTILUBE F76	CENTILUBE H76	CENTILUBE S76
CHEVRON	Standard	NL GEAR COMP 220	NL GEAR COMP 460	NL GEAR COMP 680
DUCKHAMS	Standard	GALEX EP220	GALEX EP460	
EDGAR VAUGHAN	Standard	COSMOLUBE 220	COSMOLUBE 460	COSMOLUBE 680
ESSO	Standard Synthetic	SPARTAN 220 GLYCOLUBE 220	SPARTAN 460 GLYCOLUBE 460	SPARTAN 680 GLYCOLUBE 680
FINA	Standard	GIRAN L220	GIRAN L460	GIRAN L680
GULF	Standard	EP LUB. HD 220	EP LUB. HD 460	EP LUB. HD 680
KLUBER	Standard Synthetic Synthetic	KLUBEROIL GEM1-220 KLUBERSYNTH GEM4-220 KLUBERSYNTH GH6-220	KLUBEROIL GEM1-460 KLUBERSYNTH GEM4-460 KLUBERSYNTH GH6-460	KLUBEROIL GEM1-680 KLUBERSYNTH GEM4-680 KLUBERSYNTH GH6-680
LUBRICATION ENG.	Standard	ALMAGARD 607	ALMAGARD 608	ALMAGARD 609
MOBIL	Standard Synthetic	MOBILGEAR 630 MOBILGEAR SHC 220	MOBILGEAR 634 MOBILGEAR SHC 460	MOBILGEAR 636
OPTIMOL	Standard Synthetic	OPTIGEAR 220 OPTIGEAR BM	OPTIGEAR 460 OPTIGEAR BM	OPTIGEAR 680 OPTIGEAR BM
Q8	Standard	GOYA 220	GOYA 460	GOYA 680
ROCOL	Standard	SAPPHIRE HI-TORQUE 220	SAPPHIRE HI-TORQUE 460	SAPPHIRE HI-TORQUE 680
SHELL	Standard Synthetic	OMALA 220 TIVELA SB	OMALA 460 TIVELA SD	OMALA 680 TIVELA SD
TEXACO	Standard	MEROPA 220	MEROPA 460	MEROPA 680
TOTAL	Standard	CARTER EP220	CARTER EP460	CARTER EP680

Oil manufacturers/suppliers recommended grades. Food, Pharmaceutical and Cosmetic.

Manufacturer/supplier	ISO VG220	ISO VG460	ISO VG680
KLUBER US FDA & USDA H1 Approval	KLUBEROIL 4UH1-220	KLUBEROIL 4UH1-460	KLUBEROIL 4UH1-680
MOBIL US FDA Approval	DTE FM220	DTE FM460	

These tables give manufacturers trade names for those oils meeting relevant requirements for gear oil. Before mixing oils from different manufacturers consult relevant manufacturer regarding compatibility. Synthetic and standard mineral oils should not be mixed and if changing from mineral oil to synthetic, gearbox must be thoroughly cleaned to remove old oil.

GREASE

Certain EPG gearboxes can be lubricated with **NLGI 00** or **NLGI 0** semi-fluid gear grease. Grease quantities are given in tables provided. To prevent pressure build up units are normally supplied with breather plugs which must be kept clear and in uppermost position.

Grease should be replaced after every **6000** to **8000** hours of operation or at **36** month intervals. If synthetic lubricant is used grease changes may be increased to every **15000** hours or **60** months. The standard grease supplied is suitable for an ambient temperature range of **-5°C to 50°C**. Where ambient temperature is outside this range oil lubrication is recommended.

To remove grease from small gearboxes remove motor from unit and allow grease to drain through input aperture. Flush remaining grease out with suitable flushing oil such as **SHELL VITREA 22**. Add correct quantity of new grease before replacing motor.

To remove grease from larger gearboxes, remove top cover plate and add flushing oil while running unit under no load. Remove drain plug and allow thinned solution to drain off. Replace plug and repeat procedure. Add correct quantity of new grease before replacing top cover plate.

Units should be run to warm grease before removal of old lubricant. **DO NOT** use flushing oil with synthetic grease.

Grease quantities EPG units

Gearbox	Reduction	Horizontal mounting Kgs	Vertical mounting Kgs
ESR50	116.8:1 - 28.2:1 25.15:1 - 2.33:1	0.25 0.25	0.45 0.45
ESR00	116.8:1 - 28.2:1 25.15:1 - 2.33:1	0.65 0.75	1 1
ESR1	116.8:1 - 28.2:1 25.15:1 - 2.33:1	1.2 1.4	2 2
ESR2	116.8:1 - 28.2:1 25.15:1 - 2.33:1	1.85 2.25	3.1 3.1
ESR3	116.8:1 - 28.2:1 25.15:1 - 2.33:1	3.85 4.75	8.5 8.5
ESR6	all	0.7	0.5
ESR7	all	1.5	1.1
ESR8	all	2.75	2.25
ESR9	all	0.15	0.15
ESR10	all	0.45	0.45
ESR11	all	0.85	1.1

Gearbox	B3 Kgs	B6 B7 Kgs	B8 Kgs	V5 Kgs	V6 Kgs	V1/B7 V1/B6 Kgs	V3/B7 V3/B6 Kgs	B5A/B3 B5B/B3 Kgs	B5A/B8 B5B/B8 Kgs	B5A/V5 B5B/V5 Kgs	B5A/V6 B5B/V6 Kgs
ERA33	2.1	3.2	4.3	4.8	4.5	3.6	3.2	2.1	4.8	5.2	4.9

Grease manufacturers/suppliers recommended grades. Standard and Synthetic

Manufacturer/supplier	Type	NLGI 00	NLGI 0
BP	Standard	ENERGREASE FGL	
CASTROL	Synthetic	ALPHA GEL	ALPHA GEL
CENTURY	Standard	EPLITH 00	
EDGAR VAUGHAN	Standard	STAYPUT 512	
ELF	Standard		CARDREXA GR 0
ESSO	Standard		BEACON EP
FINA	Standard	MARSON EPL 00	
KLUBER	Standard Synthetic	MICROLUBE GB 00 KLUBERSYNTH GE46-1200	MICROLUBE GB 0
MOBIL	Standard Synthetic	MOBILPLEX 44 MOBILITH SHC007	MOBILPLEX 45 -
OPTIMOL	Standard		LONGTIME PD 0
ROCOL	Standard	SAPPHIRE 000	
SHELL	Standard Synthetic	ALVANIA GL00 TIVELA A	
TEXACO	Standard	SEMIFLUID EP	
TOTAL	Standard	ROLIS N	

Grease manufacturers/supplies recommended grades, Food, Pharmaceutical and Cosmetic.

Manufacturer/supplier	NLGI 00	NLGI 0
KLUBER US FDA & USDA H1 approval	KLUBERSYNTH UH1 14-1600	
MOBIL US FDA approval	MOBILGREASE FM 003	
SHELL US FDA approval	CASSIDA RLS 00	
SLIPSTREAM LUBRICANTS Selective services Ltd PO Box 3 Bexhill-on-sea Sussex TN39 4JF		No 6 GEL

Grease manufacturers/suppliers recommended grades. For re-lubrication points.

Manufacturer/supplier	NLGI 2
DOW CORNING	MOLYCOTE BR2
ROCOL	SAPPHIRE HI-LOAD 2

These tables give manufacturers trade names for those greases meeting relevant requirements for gear grease. Before mixing greases from different manufacturers consult relevant manufacturer regarding compatibility. Synthetic and standard greases should not be mixed and if changing from standard grease to synthetic, gearbox must be thoroughly cleaned to remove old grease.

STORAGE

In all instances the units are to be kept in an environment free from vibration, excessive humidity, dust and extremes of temperature.

Before dispatch all units suitable for oil lubrication will have been flushed with a rust preventative oil. This will give adequate protection for **12 months**.

In order to redistribute oil and prevent adhesion of the oil seals to the shafts, it is necessary to rotate the unit either by hand or under power at least every three months.

After every **12 months** the unit must be re-flushed with a suitable rust preventative oil such as **SHELL ENSIS N**.

If the unit is installed and is to be run intermittently for commissioning purposes, it should be filled with the specified grade oil to the correct level, and run at full speed for approximately 5 minutes once every **3 months**.

Grease filled units need only be rotated either by hand or under power every three months.

Where units are exposed to fluctuations in temperature that may result in internal condensation, units may be completely filled with oil. The oil should be drained and replaced every **12 months**. Where this is impractical the installation of heaters inside the unit may be necessary. Consult the manufacturer for suitable wattage.

INSTALLATION

Installation and connection should be carried out by a competent Mechanical Engineer.

The units should be firmly fixed to a rigid surface and correctly aligned to avoid distortion of the housing and localized stresses.

Any coupling, pulley or sprocket must be fitted by screw pressure or heat shrinking to the shaft and not pressed or hammered on. Recommended bore sizes is **H7** or **K7** where high radial loads are transmitted. The mounting faces should be given a light coat of suitable grease or copper anti-seize compound before fitting.

Always fit pulleys and sprockets as close as possible to the housing in order to reduce the overhung loads acting on the output shaft and bearings.

Never use rigid couplings except on free end shafts, i.e. mixers and aerators.

Ensure coupling run out does not exceed manufacturer's recommendations and that flat or V belts are correctly aligned and not over tightened.

Where there is a risk of jamming, a slip or Torque limiting coupling is recommended to prevent damage to the gearbox.

Units are generally supplied without oil. Fill to correct level with correct grade lubricant.

Ensure Breather plug if supplied is fitted at highest point of unit.

When unit is fitted with an electric motor ensure adequate clearance is allowed at fan end and do not obstruct air flow path. Motor should only be connected by a competent Electrician. For full load current and voltages see motor nameplate. A connection diagram should be supplied with the motor.

MAINTENANCE

Regularly check oil level via solid level plug or transparent level plug and top up if required.

Ensure Breather plugs if fitted are functioning to prevent pressure build up which can cause leaks.

Under normal operating conditions the only maintenance necessary is to periodically renew the gearbox lubricant and replace bearings and seals when signs of wear become evident. Gear life will be dependent on operating conditions and a minimum life of **10,000 hours** can be expected although actual life may exceed this by many times. Gears and internal components should be replaced as necessary when indicated by loss of performance or increase in noise and vibration level.

Electric motors and Brakes should be maintained in accordance with manufacturer's instructions. Isolate power supply to motor before commencing any routine cleaning or maintenance work.

OVERHUNG LOADS

Overhung loads are frequently found on the output shaft of a gearbox, imposing additional loads, especially on the drive end bearing. These additional loads are usually the result of a sprocket, gear or pulley.

The overhung load can be calculated as follows:

$$\text{Overhung Load, } L_o = \frac{kW \times 1.95 \times 10^6 \times \lambda}{RPM \times PCD}$$

Where L_o = Overhung Load (Kg)

kW = Power is in kilowatts (kW)

PCD = Pitch circle diameter of the pulley in millimeters (mm)

RPM = Speed of shaft (RPM)

λ = A constant depending upon the type of transmission

Values of λ are given in the table below.

Type of Transmission	λ
Pinion or Chain Sprocket	1
V Belt	1.3
Flat Belt	2

If the overhung load calculated is greater than that permissible for the chosen gearbox, it is possible to reduce the load imposed by increasing the pulley diameter. If this is not possible certain types of unit are available with heavy duty bearings.

The maximum overhung loads quoted in the catalogue assume that they act at the midpoint of the pulley. If this is not the case the maximum permissible bearing load will be modified as follows; with reference to figure 1.

First calculate the resultant bearing load, R_b, based on the catalogue maximum overhang load.

$$\text{Resultant Bearing Load, } R_b = \frac{L_{cat} \times A}{B}$$

Where

L_{cat} = Overhang load given in catalogue (kg)

The maximum permitted radial load L_z at a different overhang length, Z from that given in the catalogue is given by: -

$$\text{Maximum Overhang Load, } L_z = \frac{R_b \times B}{Z}$$

Where a thrust load is present, this must be added to the resultant bearing load, R_b, prior to calculating the maximum overhang load.

Shaft Stress due to Load Offset From Pulley Centre.

If the overhang length increases beyond the standard catalogue value then the stress of the shaft should be checked. (The standard overhang length is given in the catalogue as dimension Q for foot mounted and dimension N for flange mounted.)

The axial stress in the shaft due to a thrust load, if any, is given by;-

$$\text{Axial Stress, } \sigma_a = \frac{39.24 \times L_a}{\pi \times d^2}$$

Where L_a = Axial Thrust Load (kg)

d = Shaft diameter of overhang (mm)

The bending stress of the drive end bearing is given by;

$$\text{Bending stress, } \sigma_a = \frac{313.92 \times (L_o + M_p) \times (Z - B)}{\pi \times d^3}$$

Where L_o = Overhung load (kg)

M_p = Mass of Pulley (kg)

The shear stress at the drive end bearing is given by:

$$\text{Shear stress, } \tau = \frac{78.48 \times Lo \times PCD}{\pi \times d^3}$$

The maximum combined shaft stress, based on Mises criterion, is given by:

$$\text{Combined Shaft stress} = \sqrt{\sigma^2_a + \sigma^2_b + 3 \times \tau^2}$$

If this figure is greater than the endurance limit of the shaft (ultimate tensile strength divided by 2, approx. 300 N/mm^2) consult the LSE design office.

Assumptions Made

1. The shafts own weight and the weight of the pulley give rise to a shear stress, which is not included in the stress calculation; which is assumed negligible.
2. Stresses arising from grooves, changes in diameter, fillet radii and keyways are not included.
3. Any pre-tensioning force in the drive mechanism acts vertically downwards, as does the force due to the pulleys own weight. (So that the maximum bending moment on the shaft is considered.)

Data for Calculating Overhung Loads

Gearbox Type	A (mm)	B (mm)	Standard Overhang Length(mm)
ESR1	102.5	75	35
ESR1H	102.5	73.5	35
ESR2	124	94	40
ESR2H	124	92	40
ESR3	174.5	130.5	55
ESR3H	174.5	128	55
ESR35	215.5	170.5	65
ESR4	240	193	70
ESR4SS	241.5	193.5	70
ESR425	334	274	92.5
ESR45	392	328	105
ERA33	173.5	143	40
ERAV33	221.5	191	40
ERA44	215	176	44.5
ERAV44	270	225	55
ESR9	65.5	50	20.5
ESRV9	100.5	86	20.5
ESRV10	89.5	69.5	25.5
ESR10	146.5	128.5	25.5
ESR11	122.5	95.5	35.5
ESRV11	182.5	154.5	35.5

Note
On ESR units
Suffix V indicates a
Flange Mounted Unit
Suffix H indicates a
heavy duty bearing
version

SHAFT LOAD DIAGRAM

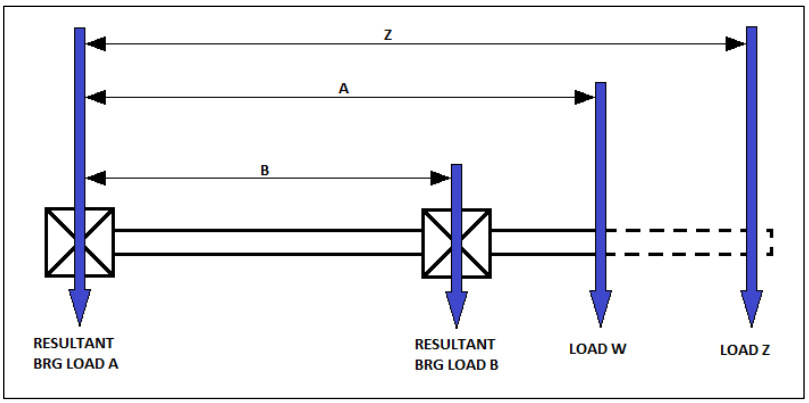

"H" TYPE OUTPUT BEARING AND SHAFTS AVAILABLE ON REQUEST FOR ESR1, ESR2, ESR3 AND ERA44.

"H" TYPE OUTPUT BEARING AND SHAFTS STANDARD ON ESR35, ESR4, ESR4SS, ESR425 AND ESR45.

DISCO MECHANICAL VARIABLE SPEED DRIVE UNIT.

All the units within this publication can be fitted with a Disco Mechanical Variable Speed unit.

The **DISCO DRIVE** is a well proven variable speed traction drive, simple in construction. All the power transmission parts in the **DISCO DRIVE** are manufactured from specialist steels, precision finished and ground to fine limits to ensure high efficiency and long working life. The unit is dynamically balanced and shafts are carried on ball bearings of ample size. **DISCO DRIVE** units are quiet and free from vibration and run relatively cool running. Wear in the transmission parts is minimal and even if the unit runs at fixed speeds for long periods, though this is not recommended.

The **DISCO DRIVE** gives you an infinite speed variation between 2 fixed speeds; e.g. 1450rpm motor input, 1000-165rpm **DISCO DRIVE** output. The speed ranges can be altered by mounting the **DISCO DRIVE** on an **ELECTROPOWER GEARS** gearbox.

STORAGE

In all instances the units are to be kept in an environment free from vibration, excessive humidity, dust and extremes of temperature.

Before dispatch all units suitable for oil lubrication will have been flushed with a rust preventative oil. This will give adequate protection for **12 months** under the conditions given in 1.1 In order to redistribute oil and prevent adhesion of the oil seals to the shafts, it is necessary to rotate the unit either by hand or under power at least every three months. After every **12 months** the unit must be re-flushed with a suitable rust preventative oil such as **SHELL ENSIS N**.

If the unit is installed and is to be run intermittently for commissioning purposes, it should be filled with the TELLUS 32, or equivalent (Table 1), to the correct level, and run at full speed for approximately 5 minutes once every **3 months**.

Where units are exposed to fluctuations in temperature that may result in internal condensation, units may be completely filled with oil. The oil should be drained and replaced every **12 months**. Where this is impractical the installation of heaters inside the unit may be necessary. Consult the manufacturer for suitable wattage.

INSTALLATION

Installation and connection should be carried out by a competent Mechanical Engineer.

The units should be firmly fixed to a rigid surface and correctly aligned to avoid distortion of the housing and localized stresses.

Any coupling, pulley or sprocket must be fitted by screw pressure or heat shrinking to the shaft and not pressed or hammered on. Recommended bore sizes is **H7** or **K7** where high radial loads are transmitted. The mounting faces should be given a light coat of suitable grease or copper anti-seize compound before fitting. Always fit pulleys and sprockets as close as possible to the housing in order to reduce the overhung loads acting on the output shaft and bearings. Never use rigid couplings except on free end shafts, i.e. mixers and aerators. Ensure coupling run out does not exceed manufacturer's recommendations and that flat or V belts are correctly aligned and not over tightened. Where there is a risk of jamming, a slip or Torque limiting coupling is recommended to prevent damage to the gearbox.

Units are generally supplied without oil. Fill to correct level with correct grade lubricant. Ensure Breather plug if supplied is fitted at highest point of unit.

When unit is fitted with an electric motor ensure adequate clearance is allowed at fan end and do not obstruct air flow path. Motor should only be connected by a competent Electrician. For full load current and voltages see motor nameplate. A connection diagram should be supplied with the motor.

MAINTENANCE

Regularly check oil level via solid level plug or transparent level plug and top up if required. Ensure Breather plugs if fitted are functioning to prevent pressure build up which can cause leaks. Under normal operating conditions the only maintenance necessary is to periodically renew the lubricant and replace bearings and seals when signs of wear become evident. Gear life will be dependent on operating conditions and a minimum life of **10,000 hours** can be expected although actual life may exceed this by many times. Internal components should be replaced as necessary when indicated by loss of performance or increase in noise and vibration level.

Electric motors and Brakes should be maintained in accordance with manufacturer's instructions. Isolate power supply to motor before commencing any routine cleaning or maintenance work.

OIL LUBRICATION

Discos are normally supplied with no oil and must be filled to the correct level before use. An oil level glass or marked plug is fitted in the appropriate position. If no mounting position is stated on order, unit will be supplied with level plug and breather positioned for B3 or V1 mounting. To prevent pressure build up units are normally supplied with breather plugs which must be kept clear and in uppermost position. Overfilling, high input speeds or incorrect lubricant may cause leakage through breather. Alternative breathers are available if required. Oil in a new unit should be drained and replaced after first **500** hours of operation. Subsequent oil changes are recommended at **5000** hour or at **24** month intervals. Oil should be drained when warm and use of flushing oil is recommended especially at first oil change. A suitable flushing oil is **SHELL VITREA 22**. This applies for an ambient temperature range of **0 ºC to 40 ºC**. Where ambient temperature is outside this range please refer to manufacturer.

For high ambient temperatures, +30ºC to +43ºC, Shell Tellus 46 is recommended with a reduced oil change frequency of 700 running hrs.

NOTE. DISCO LONG LIFE OIL IS NO LONGER AVAILABLE.

Grade	**Shell**	**BP**	**Castrol**	**Exxon Mobil**	**Avin**
Industrial	Tellus 32	Energol HLP-HM 32	Hyspin AWS 32	Hydraulic Oil 32	Hydrol Oil ISO 32
Food	Cassida Fluid HF 32			DTE FM 32	

DISCO OPERATION

Only operate hand wheel once moving/running
Do **NOT** change direction of motor until unit output shaft has ceased rotating.
Do **NOT** alter maximum/minimum speed settings in unit. (Dead stops located within the unit itself)
Use only approved oil; Shell Tellus 32.
Regularly check oil state for debris. Discoloration is allowed as these units operate at higher temperatures.

DISCO OIL QUANTITIES (IN LITRES)

MOUNTING / DISCO SIZE	B3/B5	B6/B7	B8	V1/V5	V3/V6
3	0.4	0.5	0.7	0.7	0.7
4	0.6	0.5	0.9	1.0	1.0
15	0.9	0.7	1.3	1.8	1.4
24/26	1.6	2.0	2.2	3.0	3.5
36	2.0	2.6	3.5	4.8	4.5
46/48	3.0	4.0	5.0	7.5	5.5
DD04	1.5	N/K	N/K	2.5	N/K
DD15	3.0	N/K	N/K	6.0	N/K
DD24/26	4.0	N/K	N/K	8.0	N/K

2. INLINE GEARBOXES

ESR00 TO ESR8

SINGLE, DOUBLE AND TRIPLE REDUCTION UNITS

MOUNTING POSITIONS

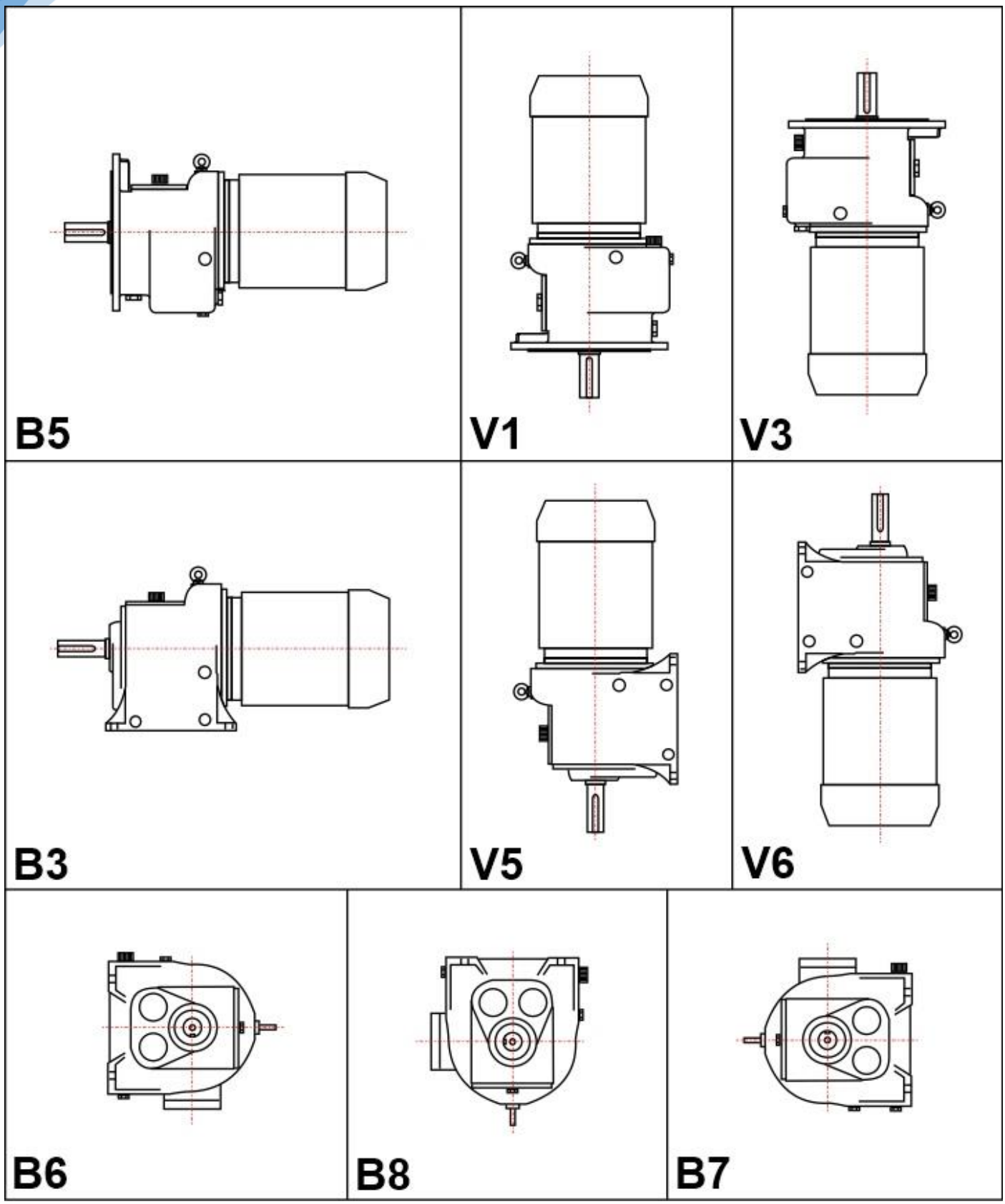

OVERHUNG LOADS

MAXIMUM PERMISSIBLE OVERHUNG LOADS (KG) FOR INLINE UNITS

NOMINAL OUTPUT SPEED	ESR UNIT SIZE												
RPM UP TO	50	0	1	1H	2	2H	3	3H	35	4	4SS	425	45
10.5	95	189.3	390	572.9	475	876.8	735	1474.2	2270	3000	3450	4536	6080
12	95.3	186.4	376.5	572.9	462.7	876.8	716.8	1474.2	2230.8	2912	3310	4408.9	5960.2
14	93	184.2	360.6	548.4	444.5	842.3	696.7	1430.6	2181.8	2812.3	3245	4256.9	5806
16	90.7	181.9	344.7	523.9	427.3	807.4	675.9	1388.9	2135	2712.5	3130	4107.3	5654
18	88.4	179.7	328.4	449	408.2	773.4	654.5	1347.1	2087.4	2617.2	3066.3	3955.3	5499.8
20	86.2	177.9	313	476.3	390.1	739.4	635	1306.3	2041.2	2517.4	2903	3810.2	5352.4
22	83.5	175.8	299.4	455.9	379.9	716.7	606.9	1270	1968.6	2426.7	2825.9	3680.9	5225.4
25	79.1	172.6	281.2	425.9	362.9	684.9	566.5	1221.5	1864.3	2293.8	2705.7	8492.6	5050.7
27	76.4	170.4	269.9	405.9	353.8	663.6	538.9	1188.4	1796.2	2204.5	2594.5	3365.6	4930.5
30	72.1	167.7	251.7	376.5	337.9	635	499	1093.1	1891.9	2066.6	2481.1	3181.9	4760.4
33	69.4	165.5	239.5	354.7	327.9	610.1	471.3	1013.8	1623.9	1973.1	2322.4	3052.7	4630
37	65.8	161.3	220	328.9	306.6	567	427.3	948	1486.4	1859.7	2222.6	2821.3	4399.8
43	63.5	155.7	208.7	318.9	275.8	517.1	411.9	875.4	1424.3	1820.7	2152.3	2535.6	4161.7
47	62.1	152.1	205.9	313.9	257.2	501.7	405.5	855.9	1409.3	1801.2	2104.7	2474.3	4095.9
51	60.3	147.2	203.7	308.4	248.1	489	399	841.4	1396.2	178.6	2063.8	2422	4023.3
57	58.5	141.4	199.6	303.9	240.4	479.4	392.4	829.6	1380.7	1759.9	2032.1	2363.2	3955.3
65	56.7	133.9	195.5	299.4	233.6	469.5	385.6	814.2	1365.3	1732.7	1998.7	2286	3866.9
76	54.9	120.1	191.4	293.9	229.1	459.5	337.8	797.4	1358.5	1713.2	1961.8	2159.1	3753.5
85	53.1	113.9	187.8	258.8	226.8	451.3	370.6	775.6	1292.7	1662	1905.1	2106.9	3683.2
94	51.3	108.6	184.6	279.9	224.1	443.6	363.3	757.5	1261	1623.9	1877.9	2063.8	3612.8
103	49.4	103.2	181.4	274.4	220.9	436.4	357.4	742.5	1229.2	1596.6	1848.4	2023	3533.5
114	48.1	98.3	176.9	270.3	217.7	429.5	351.5	729.4	1195.2	1560.3	1816.6	1988.5	3447.3
128	46.7	94.7	174.2	264.4	215.9	423.2	344.7	716.7	1161.2	1533.1	1775.8	1940.5	3318
138	44.9	90.7	170.1	285.5	212.3	419.6	339.3	703.1	1121.7	1496.8	1741.8	1878.8	3243.2
151	43.1	87.2	166.5	253.1	208.7	407.3	331.1	689.5	1088.6	1460.6	1741.8	1878.8	3111.6
164	42.2	84.9	463.3	248.1	204.1	400.1	324.8	679.5	1052.8	1428.8	1694.6	1864.3	3039.1
177	41.3	83.2	161	244	201.8	396	321.1	674	1041	1408.4		1845.2	2961.9
190	39.5	80	156.5	237.7	196	384.2	311.2	659.5	1013.8	1369.8	1650.2	1826.2	2896.2
210	38.6	77	152.9	230	191	375.1	302.5	638.7	983.4	1331.3	1598.5	1794.4	2812.3
230	37	73.8	148.8	233.6	186.4	364.7	293	630.5	952.5	1288.2	1560.3	1775.8	2748.8
254	35.6	71.2	145.1	217.3	182.3	355.2	282.6	616	929	1251.9	1518.6	1741.8	2662.6
278	34.5	68.1	140.2	209.1	177.8	344.7	271.7	598.7	897.2	1204.3	1476.4	1701.9	2569.6
303	34	66.3	137.4	203.7	174.2	334.7	262.2	583.8	870.9	1172.5	1433.3	1671	1120.4
348	32.4	64	131.5	196.9	169.6	322	250.4	560.6	836.4	1131.7	1385.7	1602.1	2354.3
385	32.2	61.8	127.9	189.6	165.1	309.3	239.5	540.2	806.5	1090.9	1351.7	1545.8	2245.3
417	31.1	59.1	122.5	181.4	158.8	296.6	226.3	516.2	775.2	1036.5	1308.2		
455	30.2	57	119.3	172.8	153.8	186.7	215.5	495.8	748.9	988.8	1268.2	1476	2116
501	29	54.7	115.2	162.87	147	276.7	201.8	470.4	723.9	941.2	1222.4	1402.5	1973.1
559	28.1	52.5	112	154.2	141.1	269.4	190.5	446.3	674	891.3	1149.4	1322.7	1814.4
613	27.2	507	108.9	143.3	134.3	263.1	179.2	419.1	628.2	836.4	1086.3	1251	1673.7

THRUST LOADS (AWAY)

MAXIMUM PERMISSIBLE THRUST LOADS APPLIED TO OUTPUT SHAFT AWAY FROM GEARBOX (KG) FOR INLINE UNITS

NOMINAL OUTPUT SPEED	ESR UNIT SIZE									
RPM UP TO	50	0	1	2	3	35	4	4SS	425	45
10.5	49.6	334.5	408	545	862	1272	1820	2270	3450	4080
12	49.9	306.9	395	478	766	1220	1740	2235	3320	3920
14	48.8	300.4	372	460.3	714.4	1159.8	1687.3	2200	3061.7	3592.4
16	47.8	293.2	355.6	449.9	689.4	1133.9	1660.1	2170	2968.3	3492.6
18	47.2	286.1	341.5	441.3	670.8	1115.4	1638.4	2136.4	3693.9	3425.5
20	46.3	279	329.3	434	654	1097.7	1619.3	2111.5	2836.7	3374.7
22	45.4	271.8	317.5	427.3	639.5	1080.9	1601.2	2086.5	2778.7	3321.6
25	44.2	261.2	306.2	417.7	617.8	1059.1	1577.6	2044.8	2707	3256.8
27	43.5	254	299.8	412.7	605.1	1045.9	1562.6	2032	2667.1	3218.7
30	42.6	243.8	291.2	404.6	587.4	1026.9	1542.2	1999	2614.9	3163.3
33	42	236.7	283	396.9	570.1	1009.7	1521.8	1975.8	2571.8	3111.6
37	40.8	222.5	273.5	387.5	548.8	987.5	1496.8	1950.4	2526.5	3048.1
43	39.7	210	260.8	375.6	530.2	957.1	1466.9	1930.9	2468.4	2970.1
47	38.8	202.4	253.1	368.7	518.9	938.9	1448.3	1919.1	2428.5	2923.8
51	38.1	192.6	245.8	361.9	508.9	922.1	1435.1	1906.9	2389.5	2882.1
57	37	181.6	265.8	352.4	495.3	897.6	1407	1889.2	2330.1	2824.9
65	35.4	168.6	223.6	341.1	479.9	867.3	1376.6	1865.6	2279.8	2757.8
76	33.3	157.9	207.7	327	461.7	830.9	1339.9	1837	2140.9	2671.6
85	31.7	152.1	197.3	317.5	449	807.4	1315.4	1814.4	2050.2	2612.6
94	30.8	147.2	195	299.4	427.7	764.7	1293.2	779	1955.9	2551.4
103	29.9	143.7	192.3	289.4	412.7	739.3	1272.3	1746.3	1911.9	2512
114	29	140.5	189.6	280.8	400	716.7	1254.2	1710.5	1871.9	2467.5
128	27.9	137	186.4	270.8	385.5	692.2	1229.2	1670.1	1829.3	2420.3
138	27	132.6	184.1	265.3	376.5	675.8	1213.3	1644.3	1802.6	2387.7
151	25.8	129	181.4	258.5	366.5	657.2	1196.6	1612	1769	2350
164	24.9	125.4	179.2	251.7	358.3	639.6	1179.3	1587.6	1741.7	2317.8
177	24.5	122.3	176.9	246.3	349.7	622.3	1165.7	-	1726.8	2284.7
190	24.3	117.9	175.1	241.3	342.5	606.4	1153	1551.3	1713.2	2252.5
210	238	113.9	171.9	233.6	331.1	583.3	1137.1	1524	1691.9	2207.2
230	23.6	109.8	168.7	227.7	321.6	561.9	1111.3	1499.1	1675.5	2165.9
254	23.1	105.4	165.1	220.4	310.7	537	1086.8	1470.1	1647.4	2118.3
278	22.9	100.5	161.5	214.1	300.7	514.8	1062.8	1442.4	1622.5	2072.9
303	22.4	97	157.8	207.7	292.1	493	1038.2	1416.1	1597.9	2030.2
348	22	92.5	148.3	197.3	276.7	458.1	990.2	1373	1551.3	1959.5
385	21.3	87.7	144.7	191.8	268.5	438.2	952.5	1341.7	1513.2	1921.8
417	21.1	81.4	140.1	186.8	261.7	420.9	920.8	1317.2	-	-
455	20.6	76.5	133.8	181.4	253.1	400.9	881.3	1291.8	1439.7	1812.5
501	20.4	70.3	127	174.6	242.7	376.4	834.6	1270	1392.5	1741.8
559	20	64.9	117.4	167.8	229.5	345.6	773.8	1246.9	1330.8	1663.7
613	19.7	57.8	109.7	158.7	217.7	317.5	716.7	1230.1	1275.5	1590.3

THRUST LOADS (TOWARDS)

MAXIMUM PERMISSIBLE THRUST LOADS APPLIED TO OUTPUT SHAFT TOWARDS FROM GEARBOX (KG) FOR INLINE UNITS

NOMINAL OUTPUT SPEED	ESR UNIT SIZE									
RPM UP TO	50	0	1	2	3	35	4	4SS	425	45
10.5	49.6	334.5	363	453	681	908	1272	2270	1635	2050
12	49.9	306.9	362.9	453.6	680.4	907.2	1270.1	2235	1632.9	2041.2
14	48.8	300.4	364.5	438.2	627.3	870.9	1192.9	2200	1573.9	1973.1
16	47.8	293.2	332.5	428.6	611	834.1	1120.4	2170	1519.5	1909.6
18	47.2	286.1	319.8	420.5	598.7	797.4	1049.6	2136.4	1465.1	1845.2
20	46.3	279	309.8	411.9	588.3	7600.7	978.8	2111	1410.7	1783.5
22	45.4	271.8	299.4	403.7	579.2	725.7	907.2	2086.5	1360.8	1723.6
25	44.2	261.1	290.3	392.4	566.5	987.6	851.8	2044.8	1287.3	1665.1
27	43.5	254	282.6	386.9	558.4	664.1	831.4	2023	1251.4	1640.6
30	42.6	243.8	278.5	376.9	546.6	635.9	810.6	1999	1204.7	1606.2
33	42	236.7	271.2	368.3	535.2	611.9	790.6	1973.8	1169.8	1574
37	40.8	222.5	263.1	358.3	521.6	589.7	771.1	1950.4	1134	1542.2
43	39.7	210	253.1	350.2	503.5	578.3	753	1903.9	1096.8	1500.5
47	38.8	202.4	247.2	344.7	492.1	570.6	742.1	1919.1	1074.5	1474.2
51	38.1	192.6	240.4	339.7	481.7	562.9	733	1906.9	1051.4	1447.9
57	37	181.6	230.9	331.6	467.6	551.6	720.3	1889.2	1021.9	1407.9
65	35.4	168.6	217.7	321.1	451.3	536.6	705.3	1865.6	981.6	1355.3
76	33.3	157.9	200.5	307.1	435.9	516.2	690.4	1837	938	1283.7
85	31.7	152.1	186	294.8	426.4	498.9	680.4	1814.4	907.2	1224.7
94	30.8	147.2	183.7	283.9	412.3	489	661.3	1779	872.2	1197
103	29.9	143.7	181	275.8	401	472.2	641.4	1746.3	850.5	1166.6
114	29	140.5	179.2	265.3	389.6	467.2	620.5	1710.5	826.9	1138.5
128	27.9	137	176	254	375.1	447.2	593.7	1670.1	796	1106.8
138	27	132.6	173.3	244.9	364.7	438.2	577	1644.3	780.2	1085.9
151	25.8	129	170.5	237.2	352.9	429.1	558.4	1612.1	762	1061.4
164	24.9	125.4	167.8	231.3	340.2	421.8	544.3	1587.6	748.4	1043.3
177	24.5	122.3	165.6	227.7	331.6	417.3	537	-	736.6	1021.9
190	24.3	117.9	163.7	224.5	323.9	412.8	529.8	1551.3	727.1	1004.2
210	23.8	113.9	161	219.1	312.5	405.9	519.8	1524.1	713	979.7
230	23.6	109.8	157.8	214.1	303	399.2	510.3	1499.1	698.5	957.1
254	23.1	105.4	154.7	207.7	292.1	391.9	499.9	1470.1	682.2	930.8
278	22.9	100.5	151	201.8	283.5	384.2	489.4	1442.4	665.9	905.8
303	22.4	97	147.4	195.9	275.8	376	479.4	1416.1	651.8	882.7
348	22	92.5	140.6	184.2	267.6	362.9	462.7	1373	625	834.6
385	21.3	87.7	135.2	174.6	250.8	351.5	454.9	1341.7	604.6	801.9
417	21.1	81.4	130.6	166.5	240.4	342	448.1	1317.2	-	-
455	20.6	76.5	124.7	156.9	227.7	331.1	440	1291.8	577	753
501	20.4	70.3	117.9	145.1	213.2	317.5	430.9	1270	567	725.7
559	20	64.9	109.8	130.6	193.7	300.3	418.7	1246.9	553.4	699.9
613	19.7	57.8	101.6	117	176.4	284.4	407.8	1230.1	544.3	683.1

SINGLE REDUCTION FEET ON MOTOR DIMENSIONS

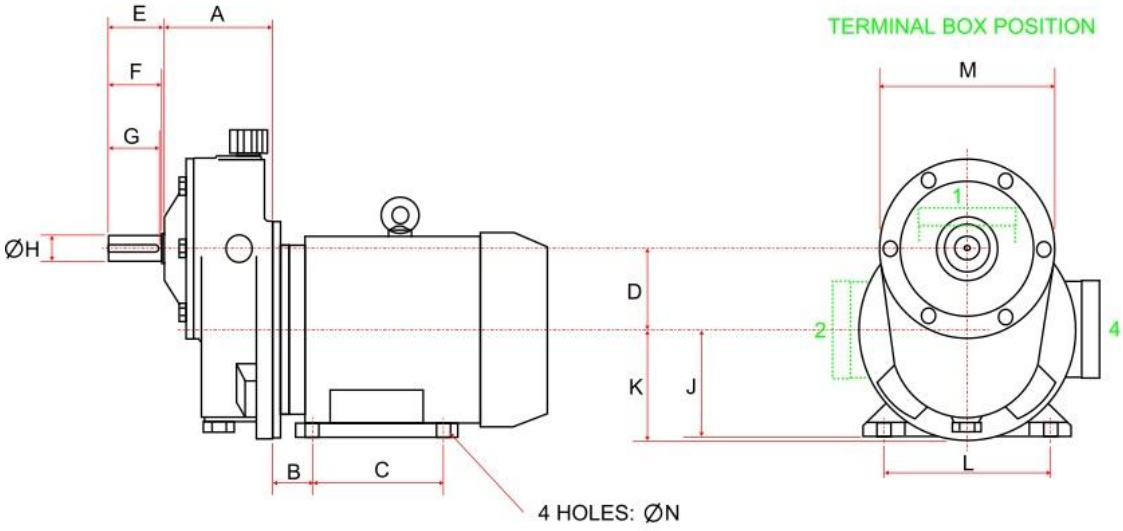

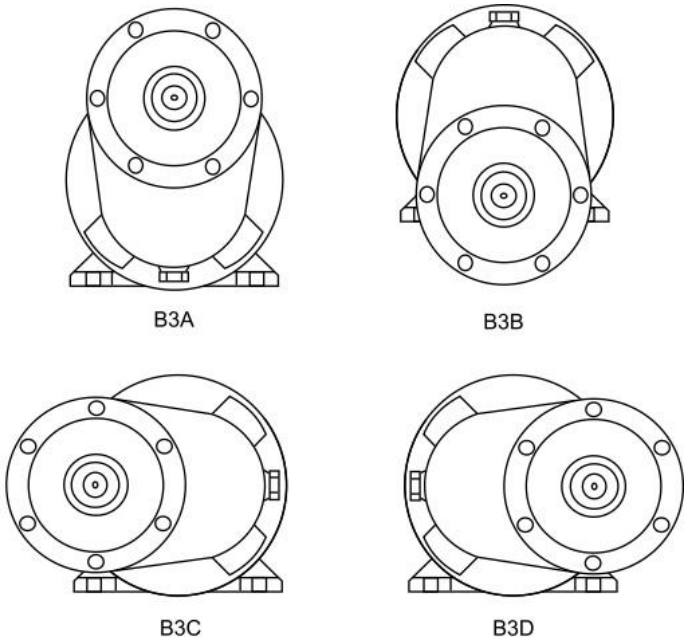

ESR	A	D	E	F	G	H	SHAFT KEY	SHAFT HOLE	M
6	82	60.96	42	40	38	19j6	6 x 6	M6 x 16	134
6H			52	50	45	24j6	8 x 7	M8 x 9	
7	102	76.2	55	55	53	28j6	8 x 7	M10 x 22	165
8	127	101.6	100	100	76	38k6	10 x 8	M12 x 28	222

	B						C								J					
ESR	D71	D80	D90	D100	D112	D132	D71	D80	D90S	D90L	D100	D112	D132S	D132M	D71	D80	D90	D100	D112	D132
6	45	62	68	77			90	100	100	125	140	140	140	178	71	80	90	100	112	132
7		50	56	77	84															
8				74	81	109														

	K						L								N					
ESR	D71	D80	D90	D100	D112	D132	D71	D80	D90S	D90L	D100	D112	D132S	D132M	D71	D80	D90	D100	D112	D132
6	82.5	100	100	125	125		112	121	140	140	160	190	216	216	7	10	10	12	12	12
7		100	100	125	125															
8				146	146	150														

DISCO DRIVES (KING'S LYNN) LIMITED, OLDMEDOW ROAD, HARDWICK INDUSTRIAL ESTATE, KING'S LYNN, NORFOLK. PE30 4LE.
TEL: +44(0)1553 761331, FAX: +44(0)1553 692137, WEB: www.discodrives.co.uk, EMAIL: sales@discodrives.co.uk

SINGLE REDUCTION FLANGE MOUNTED DIMENSIONS

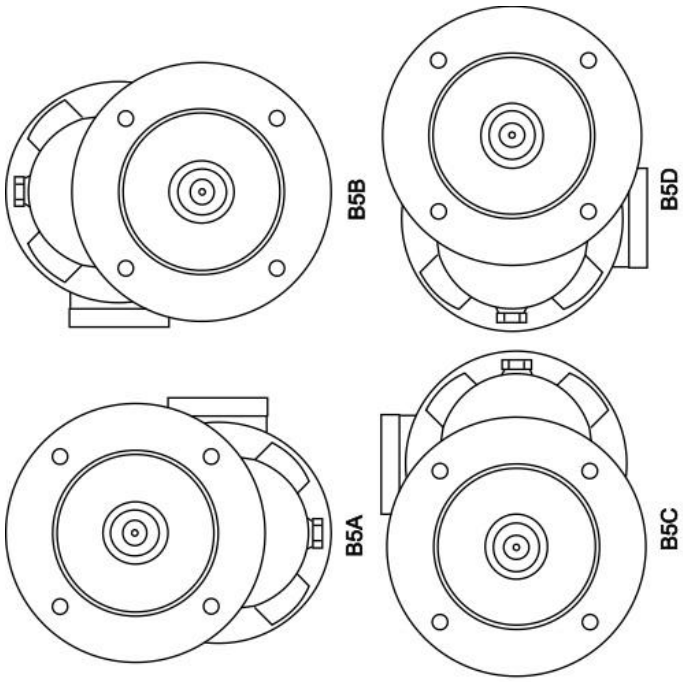

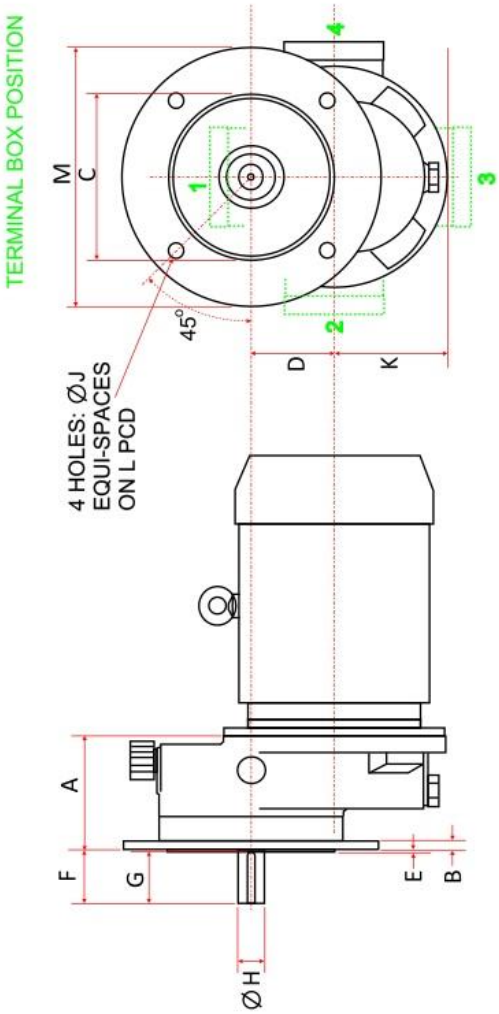

ESR	A	B	C	D	E	F	SHAFT KEY	SHAFT HOLE	G	H	J	K	L	M
6	82	8	110h6	60.96	3	40	6 x 6	M6 x 16	38	19j6	10	82.5	130	160
6H			130h6		3	50	8 x 7	M8 x 9	45	24j6	12		165	200
7	102	9	130h6	76.2	3.5	50	8 x 7	M10 x 22	53	28j6	12	100	165	200
8	127	13	180h6	101.6	5	100	10 x 8	M12 x 28	76	38k6	14	125	215	250

DOUBLE/TRIPLE REDUCTION FOOT MOUNTED DIMENSIONS

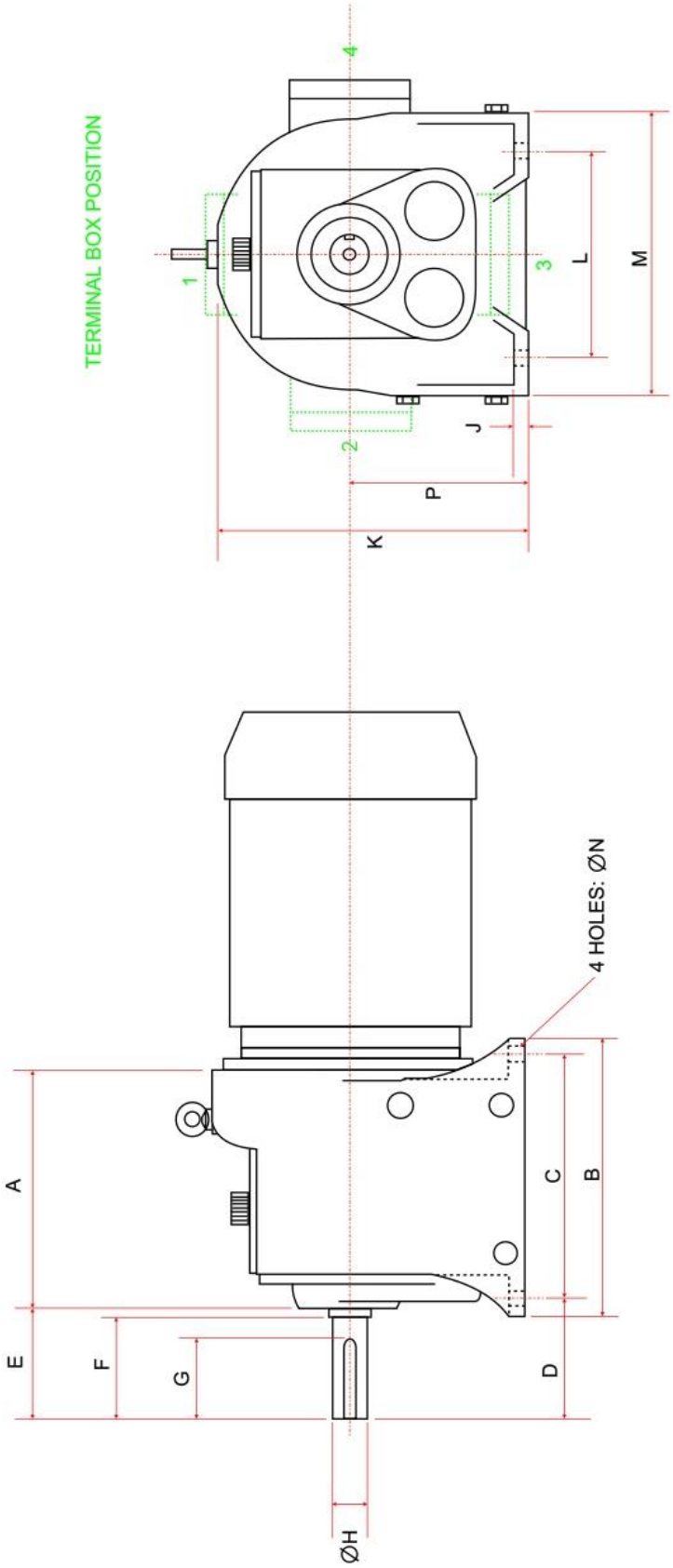

ESR	A	B	C	D	E	F	G	H	SHAFT KEY	SHAFT HOLE	J	K	L	M	N	P
50	109	127	101.6	55.5	38	38	28	16k6	5 x 5		9.5	162	101.6	139	10	92
00	145	127	105	57	40	40	36	19j6	5 x 5		11	183	140	180	10	100
1	158	197	171.5	83.5	71.5	70	62	24j6	8 x 7	M8 x 9	11	200	127	184	11	117.5
2	189	238	206	96	84	80	72	28j6	8 x 7	M10 x 22	13	254	165	228.5	15	146
3	260	305	267	130	119	110	102	38k6	10 x 8	M12 x 28	17	340	222	305	17	194
35	311	349	311	182	134	134	115	55k6	16 x 10	M20 x 42	19	406	280	368	18	229
4	335	391	343	200	155	140	134	65m6	18 x 11	M20 x 42	21	489	330	445	20	286
4SS	335	391	343	200	155	140	136	75m6	20 x 11	M20 x 42	21	489	330	445	20	286
425	481	521	457	255	198	185	165	85m6	22 x 14	M20 x 42	25	610	444	572	24	356
45	584	686	610	260	221	210	204	100m6	28 x 16	M24 x 50	32	724	482	635	27	419

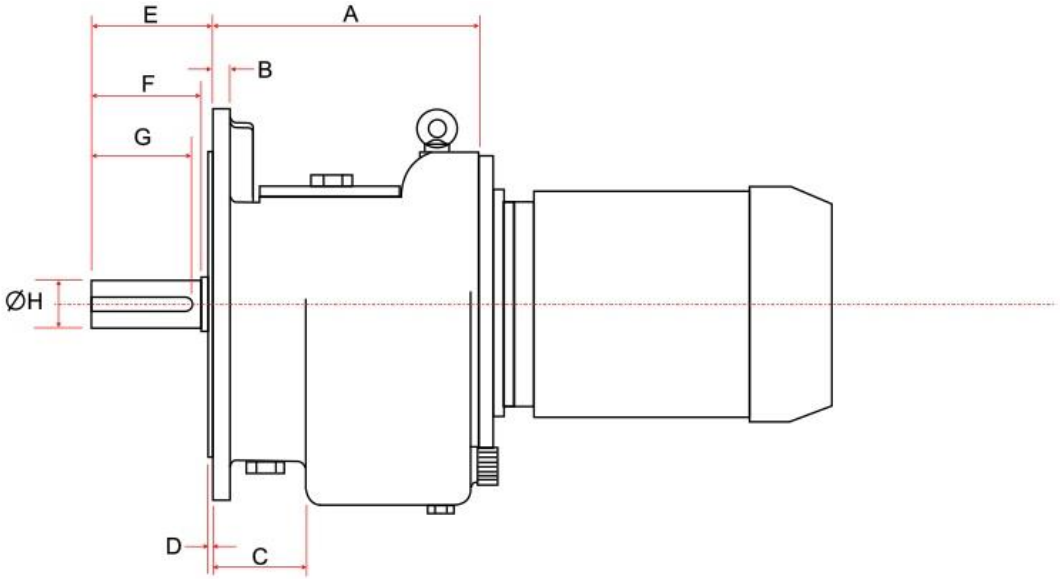

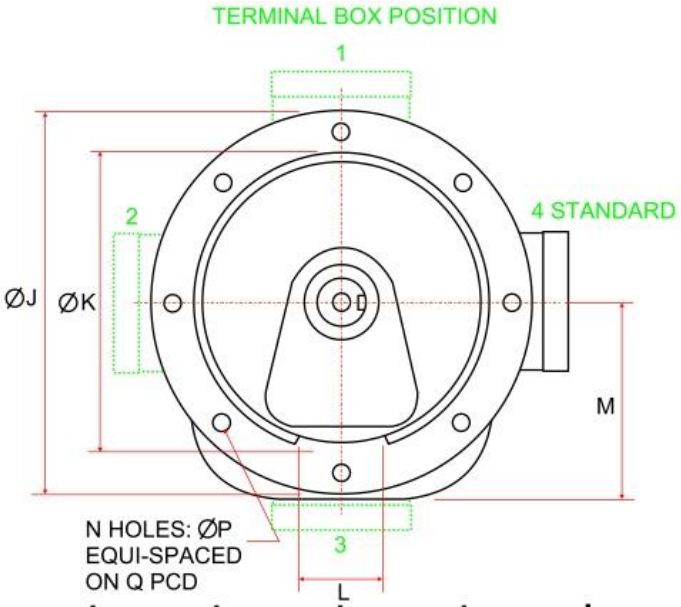

ESRV	A	B	C	D	E	F	G	H	SHAFT KEY	SHAFT HOLE	J	K	L	M	N	P	Q
50	106	8	55	3.2	50.2	50.8	28	16k6	5 x 5		165	120.6h8	N/A	90	4	8.7	139.7
*00	145	10		3	40	40	36	19j6	5 x 5		200	130h8	N/A		4	12	165
1	155	16	53	4	74	70	62	24j6	8 x 7	M8 x 9	250	180h8	132	116	4	13	215
2	189	20	65	4	84	80	72	28j6	8 x 7	M10 x 22	300	230h8	140	143	4	15	265
3	255	25	87	5	124	110	102	38k6	10 x 8	M12 x 28	400	300h8	N/A	191	4	19	350
35	306	20	105	5	140	134	115	55k6	16 x 10	M20 x 42	450	350h8	N/A	224	8	19	400
4	335	35	135	5	155	140	134	65m6	18 x 11	M20 x 42	550	450h8	250	282	8	19	500
4SS	335	35	135	5	155	140	136	75m6	20 x 11	M20 x 42	550	450h8	250	282	8	19	500
425	480	44	190	6	200	185	165	85m6	22 x 14	M20 x 42	660	550h8	N/A	347	8	24	600
45	578	44	196	6	227	210	204	100m6	28 x 16	M24 x 50	800	680h8	N/A	414	8	24	740

* ESRV00 ARE CONSTRUTED WITH A FOOT MOUNTING CASING WITH A MOUNTING FLANGE ATTACHED

DISCO DRIVES (KING'S LYNN) LIMITED, OLDMEDOW ROAD, HARDWICK INDUSTRIAL ESTATE, KING'S LYNN, NORFOLK. PE30 4LE.
TEL: +44(0)1553 761331, FAX: +44(0)1553 692137, WEB: www.discodrives.co.uk, EMAIL: sales@discodrives.co.uk

SINGLE – DOUBLE/TRIPLE COMPOUND FOOT MOUNTED DIMENSIONS

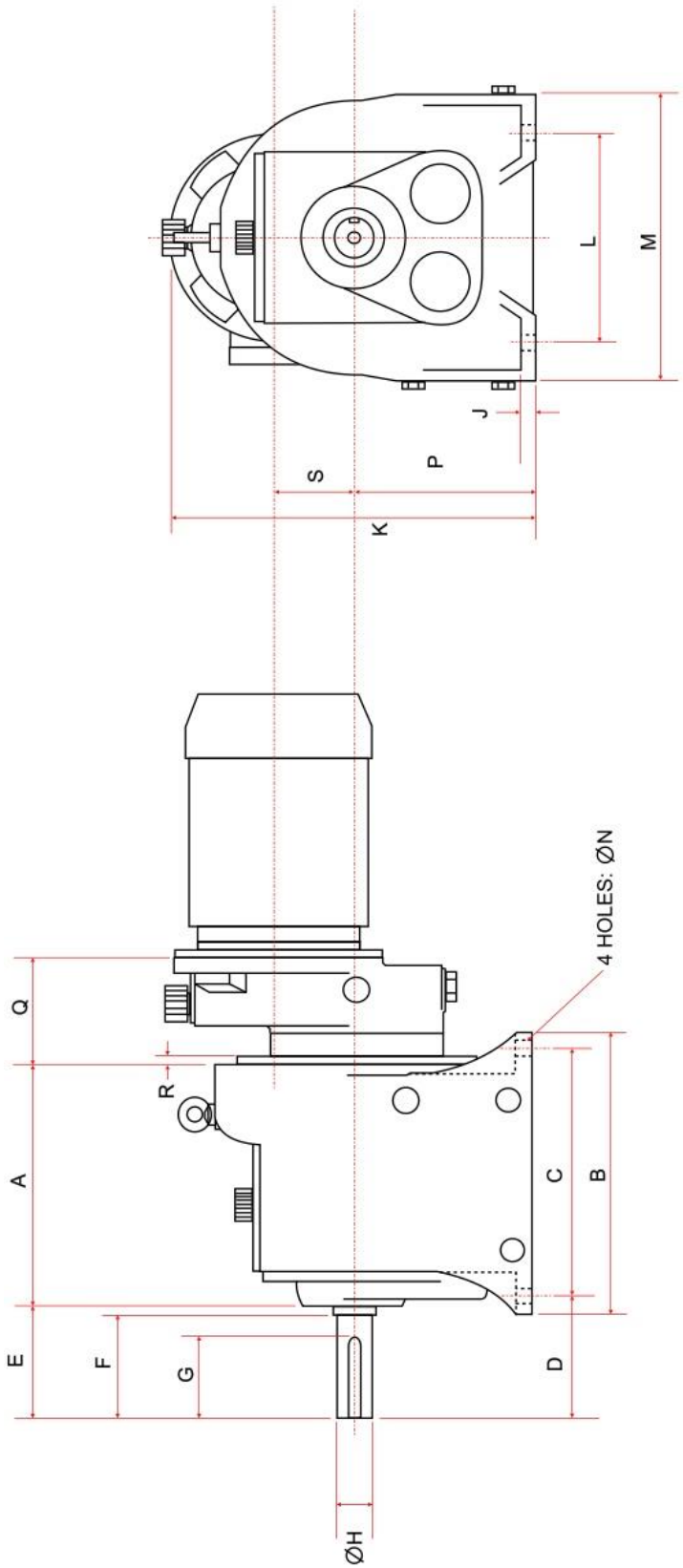

ESR	A	B	C	D	E	F	G	H	SHAFT KEY	SHAFT HOLE	J	K	L	M	N	P	Q	R	S
61	158	197	171.5	83.5	71.5	70	62	24j6	8 x 7	M8 x 9	11	200	127	184	11	117.5	82	8	60.96
62	189	238	206	96	84	80	72	28j6	8 x 7	M10 x 22	13	254	165	228.5	15	146			
73	260	305	267	130	119	110	102	38k6	10 x 8	M12 x 28	17	340	222	305	17	194	102	9	76.2
735	311	349	311	182	134	134	115	55k6	16 x 10	M20 x 42	19	406	280	368	18	229			
74	335	391	343	200	155	140	134	65m6	18 x 11	M20 x 42	21	489	330	445	20	286			
84SS	335	391	343	200	155	140	136	75m6	20 x 11	M20 x 42	21	489	330	445	20	286	127	13	101.6
8425	481	521	457	255	198	185	165	85m6	22 x 14	M20 x 42	25	610	444	572	24	356			
845	584	686	610	260	221	210	204	100m6	28 x 16	M24 x 50	32	724	482	635	27	419			

SINGLE – DOUBLE/TRIPLE COMPOUND FLANGE MOUNTED DIMENSIONS

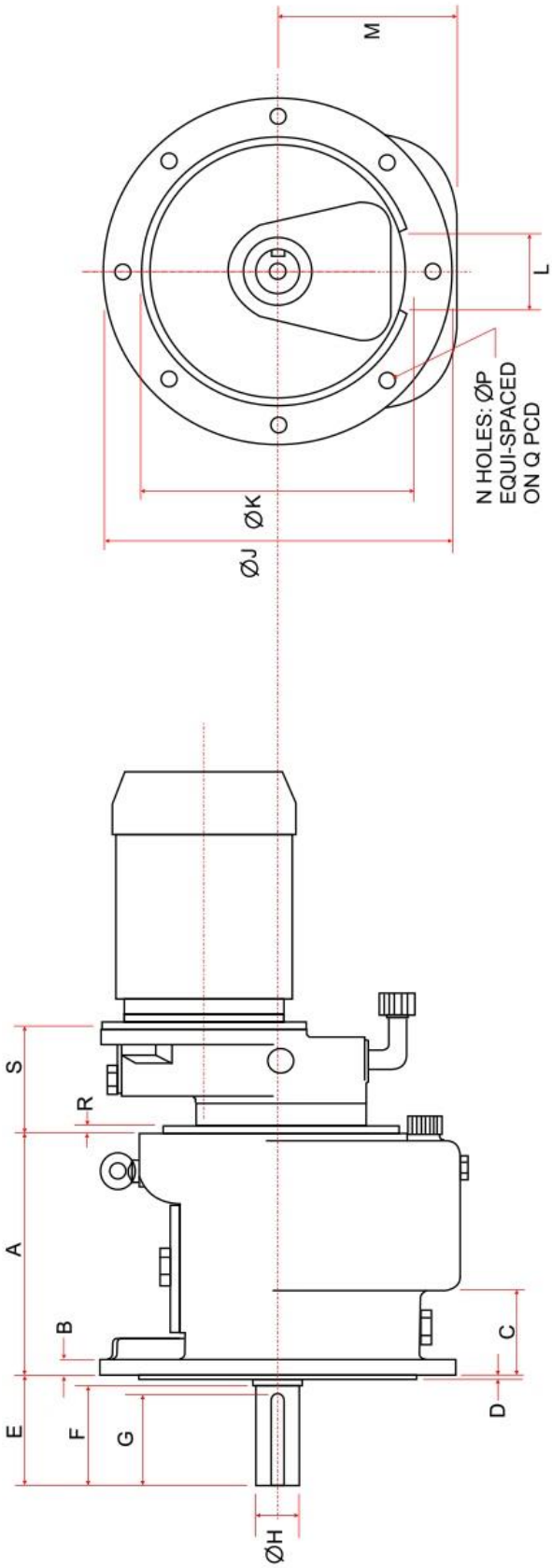

ESRV	A	B	C	D	E	F	G	H	SHAFT KEY	SHAFT HOLE	J	K	L	M	N	P	Q	R	S
61	155	16	53	4	74	70	62	24j6	8 x 7	M8 x 9	250	180h8	132	116	4	13	215	8	61
62	189	20	65	4	84	80	72	28j6	8 x 7	M10 x 22	300	230h8	140	143	4	15	265	8	61
73	255	25	87	5	124	110	102	38k6	10 x 8	M12 x 28	400	300h8	N/A	191	4	19	350	9	76.2
735	306	20	105	5	140	134	115	55k6	16 x 10	M20 x 42	450	350h8	N/A	224	8	19	400	9	76.2
74	335	35	135	5	155	140	134	65m6	18 x 11	M20 x 42	550	450h8	250	282	8	19	500	9	76.2
84SS	335	35	135	5	155	140	136	75m6	20 x 11	M20 x 42	550	450h8	250	282	8	19	500	13	102
8425	480	44	190	6	200	185	165	85m6	22 x 14	M20 x 42	660	550h8	N/A	347	8	24	600	13	102
845	578	44	196	6	227	210	204	100m6	28 x 16	M24 x 50	800	680h8	N/A	414	8	24	740	13	102

DOUBLE/TRIPLE - DOUBLE/TRIPLE COMPOUND FOOT MOUNTED DIMENSIONS

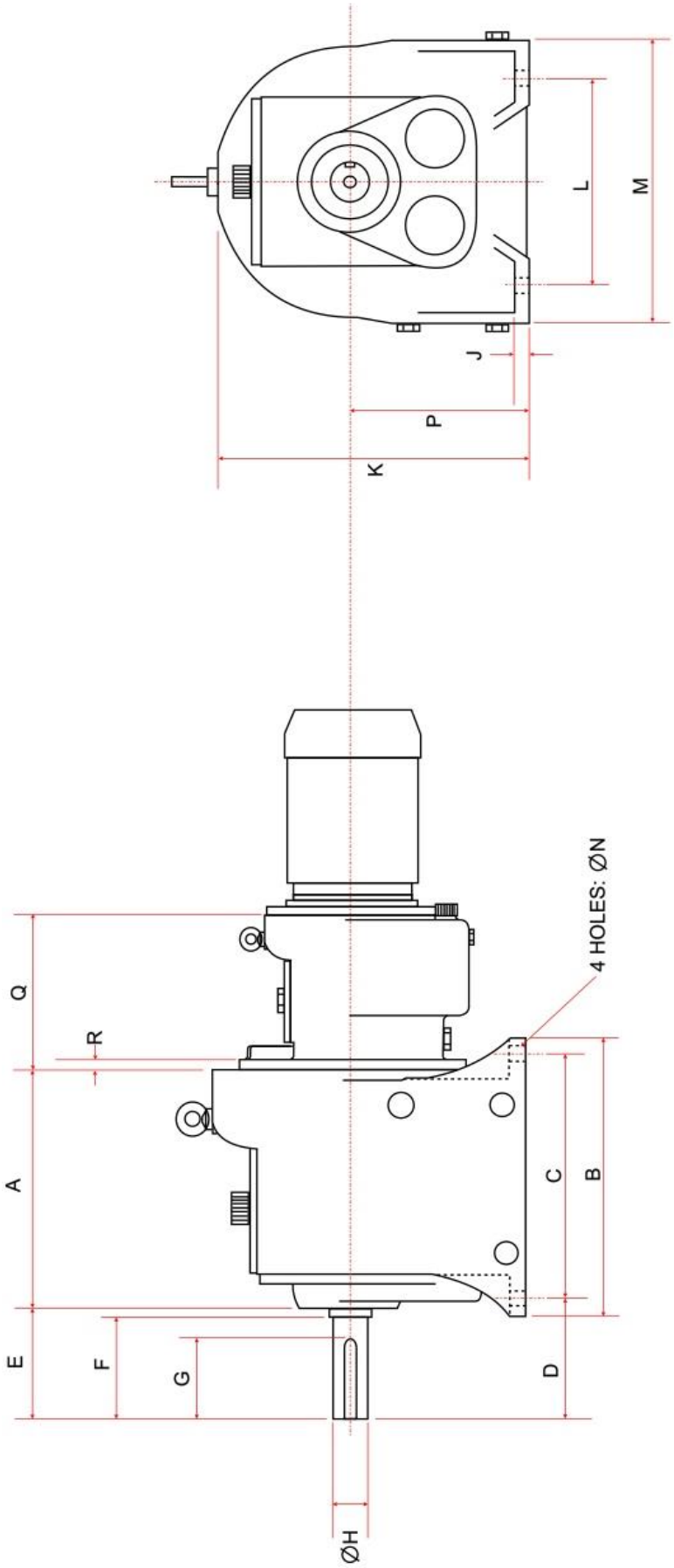

ESR	A	B	C	D	E	F	G	H	SHAFT KEY	SHAFT HOLE	J	K	L	M	N	P	Q	R
501	158	197	171.5	83.5	71.5	70	62	24j6	8 x 7	M8 x 9	11	200	127	184	11	117.5	106	8
502	189	238	206	96	84	80	72	28j6	8 x 7	M10 x 22	13	254	165	228.5	15	146	106	8
13	260	305	267	130	119	110	102	38k6	10 x 8	M12 x 28	17	340	222	305	17	194	155	16
235	311	349	311	182	134	134	115	55k6	16 x 10	M20 x 42	19	406	280	368	18	229	189	20
24	335	391	343	200	155	140	134	65m6	18 x 11	M20 x 42	21	489	330	445	20	286	189	20
24SS	335	391	343	200	155	140	136	75m6	20 x 11	M20 x 42	21	489	330	445	20	286	189	20
3425	481	521	457	255	198	185	165	85m6	22 x 14	M20 x 42	25	610	444	572	24	356	255	25
3545	584	686	610	260	221	210	204	100m6	28 x 16	M24 x 50	32	724	482	635	27	419	306	20

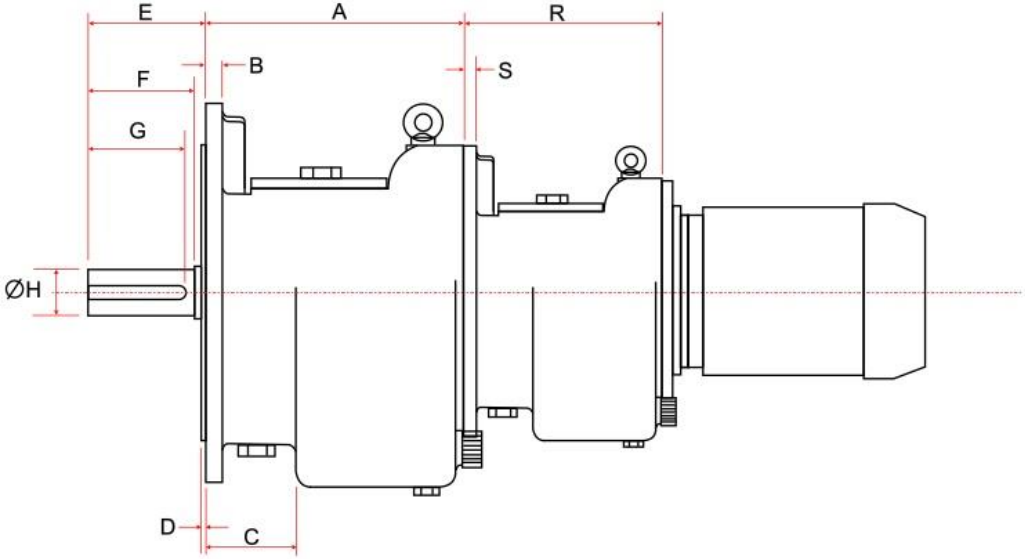

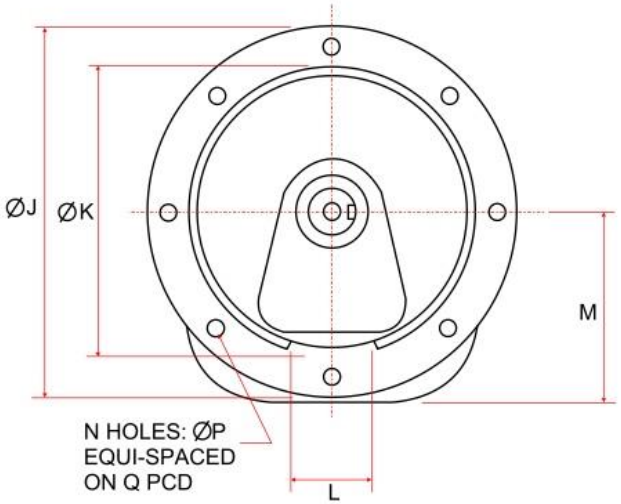

ESRV	A	B	C	D	E	F	G	H	SHAFT KEY	SHAFT HOLE	J	K	L	M	N	P	Q	R	S
501	155	16	53	4	74	70	62	24j6	8 x 7	M8 x 9	250	180h8	132	116	4	13	215	106	8
502	189	20	65	4	84	80	72	28j6	8 x 7	M10 x 22	300	230h8	140	143	4	15	265	106	8
13	255	25	87	5	124	110	102	38k6	10 x 8	M12 x 28	400	300h8	N/A	191	4	19	350	155	16
235	306	20	105	5	140	134	115	55k6	16 x 10	M20 x 42	450	350h8	N/A	224	8	19	400	189	20
24	335	35	135	5	155	140	134	65m6	18 x 11	M20 x 42	550	450h8	250	282	8	19	500	189	20
24SS	335	35	135	5	155	140	136	75m6	20 x 11	M20 x 42	550	450h8	250	282	8	19	500	189	20
3425	480	44	190	6	200	185	165	85m6	22 x 14	M20 x 42	660	550h8	N/A	347	8	24	600	255	25
3545	578	44	196	6	227	210	204	100m6	28 x 16	M24 x 50	800	680h8	N/A	414	8	24	740	306	20

DISCO DRIVES (KING'S LYNN) LIMITED, OLDMEDOW ROAD, HARDWICK INDUSTRIAL ESTATE, KING'S LYNN, NORFOLK. PE30 4LE.
TEL: +44(0)1553 761331, FAX: +44(0)1553 692137, WEB: www.discodrives.co.uk, EMAIL: sales@discodrives.co.uk

INPUT FLANGE AND SHAFT DIMENSIONS

ESR	A	B	C	D	SHAFT KEYWAY	SHAFT HOLE
50	83	32	25	14k6	5 x 5	
00	121	40	33	19j6	6 x 6	
1	121	40	33	19j6	6 x 6	
2	142	50	38	24j6	8 x 7	M8 x 19
3	155	60	50	28j6	8 x 7	M10 x 22
35	221	80	70	38j6	10 x 8	M12 X 28
4	278	110	95	55m6	16 x 10	M16 X 31
4SS	278	110	95	55m6	16 x 10	M16 X 31
425	369	140	125	70m6	20 x 12	M16 X 31
45	424	170	150	80m6	22 x 14	M16 X 31
6	121	40	33	19j6	6 x 6	
7	142	50	38	24j6	8 x 7	M8 x 19
8	155	60	50	28j6	8 x 7	M10 x 22

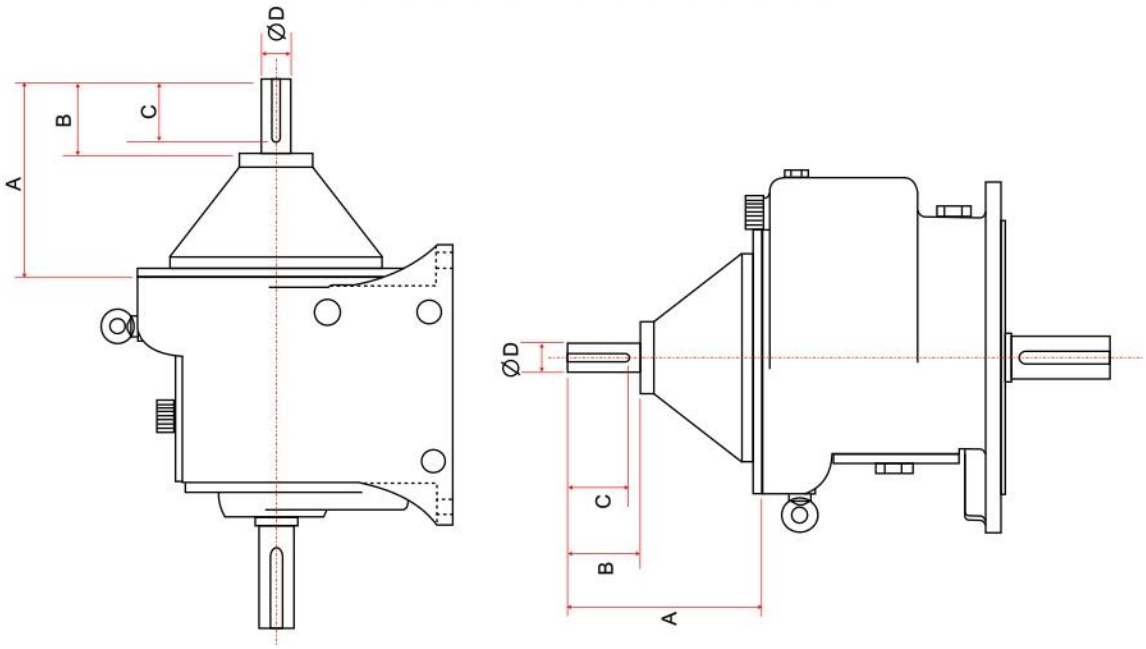

MAXIMUM BORE SIZES FOR FIRST PINIONS

THE FOLLOWING TABLE GIVES THE MAXIMUM SHAFT DIAMETER IN mm FOR ANY DRIVING UNIT DIRECT COUPLED TO THE GEARBOX.

ALL SIZES IN ***BOLD ITALIC*** ARE SUPPLIED WITHOUT KEYWAY AND WITH TWO RETAINING SCREW HOLES DUE TO ROOT DIAMETER OF THE TEETH OF THE PINION GEAR.

NOMINAL	SINGLE REDUCTION		
RATIO :1	ESR6	ESR7	ESR8
1.58	28	38	48
1.75	28	38	48
1.89	24	28	48
2.11	24	28	42
2.29	24	28	38
2.58	24	28	38
2.86	19	24	38
3.32	19	24	28
3.58	19	19	28
4.04	14	19	28
4.6	14	19	24

NOMINAL	DOUBLE REDUCTION									
RATIO :1	ESR50	ESR00	ESR1	ESR2	ESR3	ESR35	ESR4	ESR4SS	ESR425	ESR45
2.33	14	24	28	38	48	55	70	70	90	100
2.55	14	24	28	38	48	55	70	70	90	100
2.78	14	19	24	28	48	55	70	70	90	100
3.08	14	19	24	28	42	55	60	70	90	100
3.38	14	24	24	28	38	55	60	70	80	90
3.78	14	19	24	28	38	48	55	60	80	90
4.19	14	19	19	28	38	42	55	70		
4.68	14	14	19	28	28	38	48	55	70	80
5.06	14	24	28	28	48	55	70	55	90	100
5.54	14	24	28	28	48	55	70	60	80	90
6.06	14	19	24	28	48	55	70	70	80	90
6.66	14	19	24	28	42	55	60	55	80	90
7.33	14	19	24	28	38	55	60		70	80
8.12	14	19	24	28	38	48	55	60	70	80
8.61	14	24	28	38	48	55	70	55	90	100
9.43	14	24	28	38	48	55	70	55	80	90
10.32	14	19	24	28	48	55	70	48	80	90
11.35	14	19	24	28	42	55	60	42	80	90
12.48	14	19	24	28	38	55	60		70	80
13.82	14	19	24	28	38	48	55		60	80
15.35	14	19	19	24	38	42	55		60	70
17.15	11	14	19	24	28	38	48		55	60
19.3	11	14	19	19	28	28	42		55	60
21.95	11	14	14	19	24	28	38		42	55
25.15	11	14	14	19	24	28	28		42	48

	TRIPLE REDUCTION									
	ESR50	ESR00	ESR1	ESR2	ESR3	ESR35	ESR4	ESR4SS	ESR425	ESR45
13.75								70		
15.02								70		
16.39								70		
18.17								60		
19.91								60		
22.47								70		
23.4								70		
25.9								70		
28.2	14	19	24	28	48	55	70	60	90	100
31.1	14	19	24	28	42	55	60	60	90	100
34.1	14	19	24	28	38	55	60	55	90	100
40	14	24	28	38	48	55	70	55	80	90
43.8	14	24	28	38	48	55	70		80	90
47.9	14	19	24	28	48	55	70	48	80	90
52.7	14	19	24	28	42	55	60	42	70	80
58	14	19	24	28	38	55	60	38	70	80
64.25	14	19	24	28	38	48	55	28	60	70
71.25	14	19	19	24	38	43	55	38	50	70
79.7	11	14	19	24	28	38	48	28	50	60
89.7	11	14	19	19	28	28	42		48	55
102	11	14	14	19	24	28	38		42	55
116.8	11	14	14	19	24	28	28		42	48

ADDITIONAL INFORMATION

DIMENSION MAY DIFFER FROM THAT SHOWN DUE TO THE USE OF ADAPTOR PLATES AND ADDITIONAL ITEMS. THESE ARE AVAILABLE ON REQUEST.

BREATHERS WILL BE FITTED IN THE TOP DRAIN WHOLE DEPENDING ON CUSTOMERS REQUIREMENTS.

MAGNETIC DRAIN PLUG CAN BE FITTED IF REQUIRED.

TRANSPARENT LEVEL PLUG CAN BE FITTED IF REQUIRED.

WHEN ORDERING THE FOLLOWING INFORMATION IS REQUIRED:-

(THIS INFORMATION MAY BE AVAILABLE FROM A SERIAL NUMBER, BUT NOT ALWAYS)

1. UNIT SIZE. *ESR1, 2, ETC.*
2. UNIT MOUNTING. *B3, B5, ETC.* (**FLANGE SIZE AND SHAFT DIAMETER MUST BE QUOTED WHEN ORDERING ESRV6)**.
3. INPUT. A. MOTOR FRAME SIZE or MOTOR SPEED AND POWER
   B. INPUT SHAFT. *DRIVEN BY CHAIN, BELT OR COUPLING*
4. RATIO or OUTPUT SPEED OF THE GEARBOX.
5. ADDITIONAL INFORMATION THAT WILL AFFECT THE GEARBOX.

3. RIGHT ANGLE GEARBOXES

ESR9, 10 AND 11 SINGLE REDUCTION

ERA33 AND 44 DOUBLE REDUCTION

BRONZE WORM WHEEL

SOLID OUTPUT SHAFT

ESR 9, 10 AND 11 MOUNTING POSITIONS

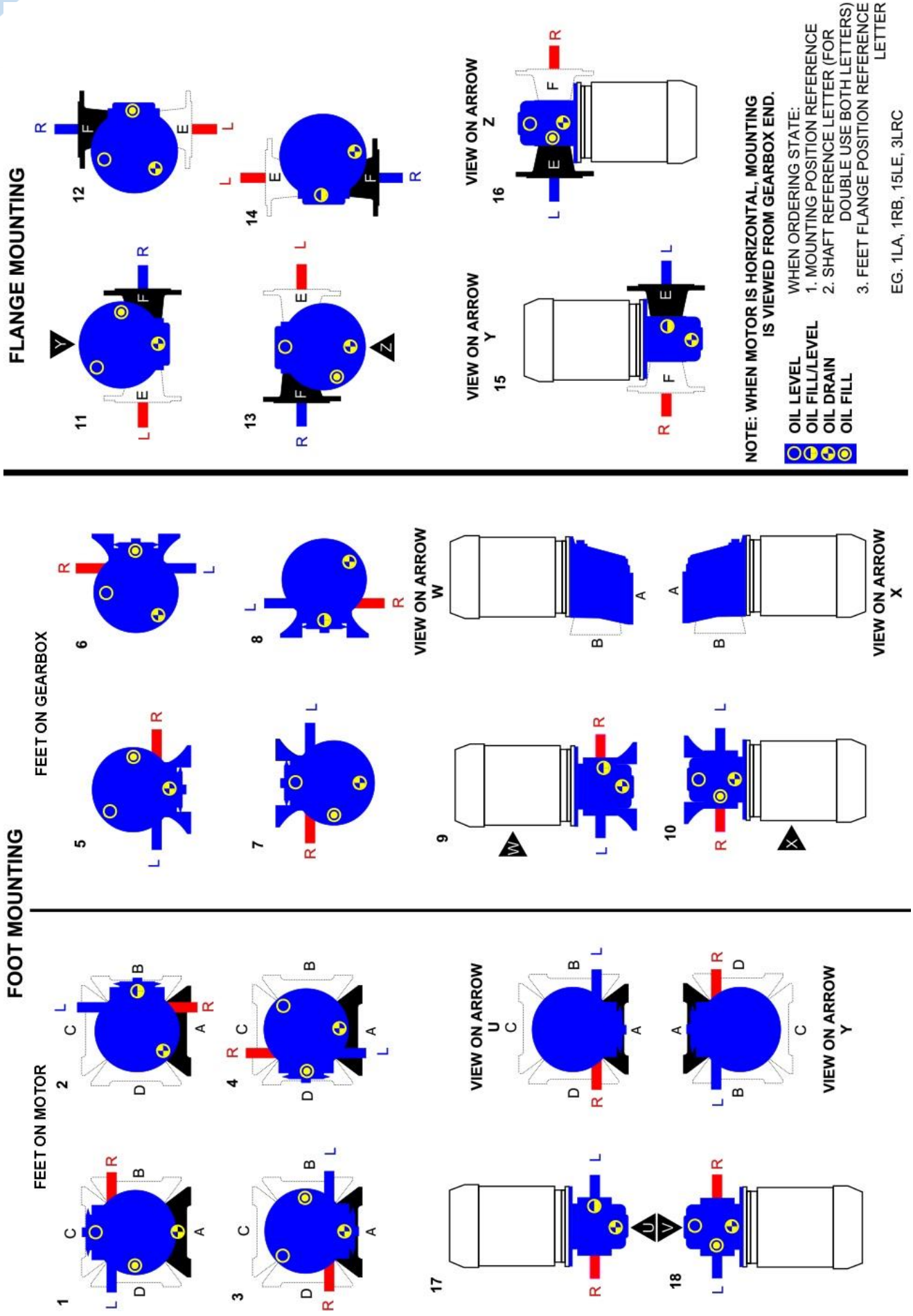

ERA33 AND 44 MOUNTING POSITIONS

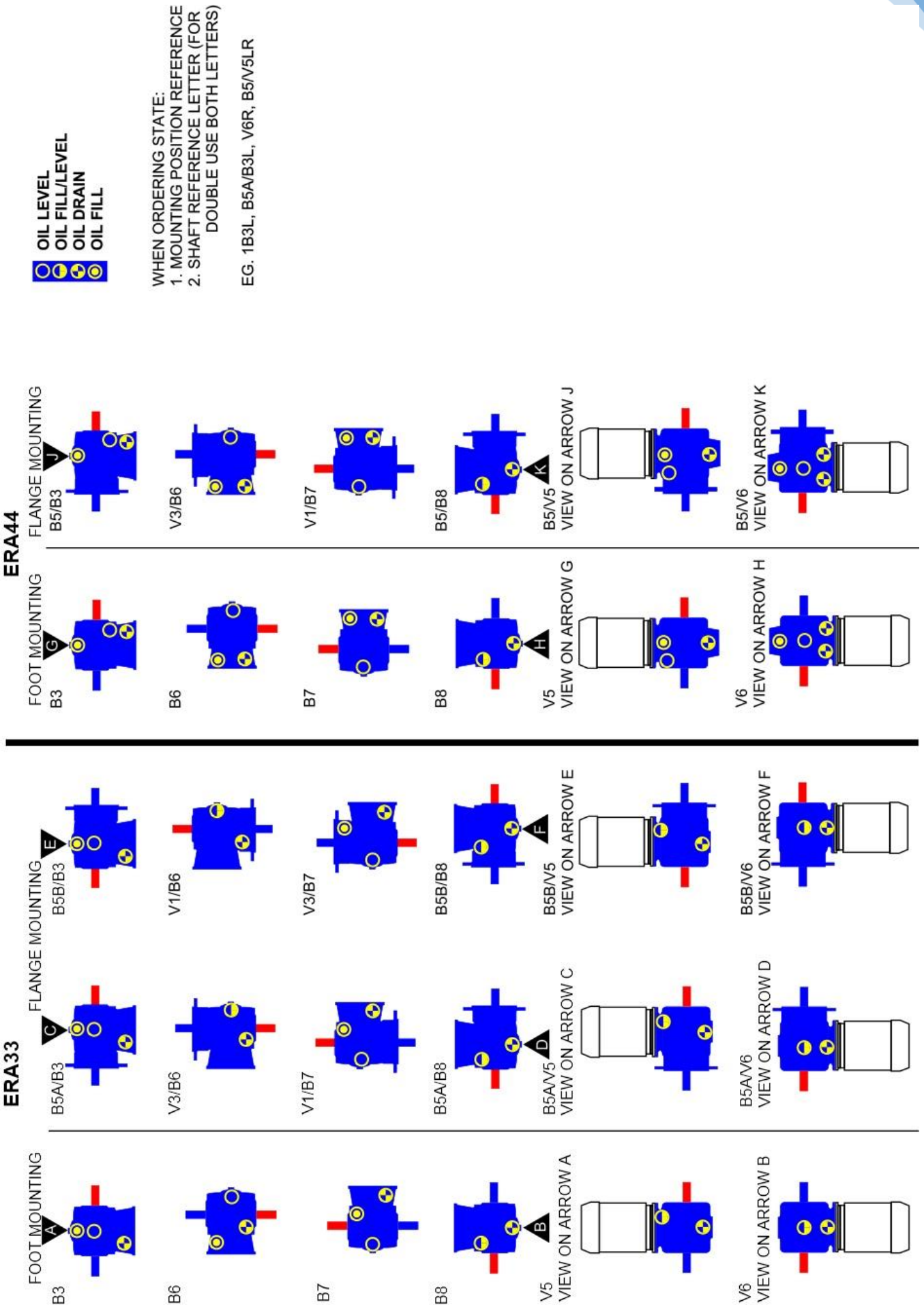

OVERHUNG LOADS (N)

NOMINAL RPM	ESR9	ESR10	ESR11
UP TO 36	804	1687	3648
48-71	667	1245	2844
95-148	556	1020	2177
197-276	467	845	1736

NOMINAL RPM	ERA33	ERA44	ERA44H
UP TO 10	6405	8763	21085
11-20	5026	6806	17482
22-36	4181	5716	15124
41-71	3069	4226	11921
76-148	2135	3025	9653
196-295	1734	2580	8650

THE **OVERHUNG LOADS** SHOWN ARE CALCULATED AS A LOAD ACTING HALFWAY ALONG THE GEARBOX OUTPUT SHAFT EXTENSION. ANY INCREASE OR DECREASE IN THE SHAFT LENGTH WILL DECREASE OR INCREASE THE PERMISSIBLE OVERHUNG LOAD. WHERE THE THRUST LOAD IS ALSO PRESENT THE RESULTANT LOAD WILL BE THE SUM OF THE TWO LOADS.

PINION OR SPROCKET LOAD (N) = $\frac{\text{kW x 9,550,000}}{\text{OUTPUT RPM x PITCH RADIUS (mm)}}$

V BELT LOAD (N) = $\frac{\text{kW x 9,550,000 x 1.3}}{\text{OUTPUT RPM x PITCH RADIUS (mm)}}$

FLAT BELT LOAD (N) = $\frac{\text{kW x 9,550,000 x 1.2}}{\text{OUTPUT RPM x PITCH RADIUS (mm)}}$

MAXIMUM TRUST LOADS (N)

NOMINAL RPM	ESR9	ESR10	ESR11
UP TO 36	534	1334	2354
48-71	445	1112	1775
95-148	356	623	1334
197-276	289	400	1069

NOMINAL RPM	ERA33	ERA44	ERA44H
UP TO 10	6140	8382	18287
11-20	4796	6500	16720
22-36	3989	5446	14478
41-71	2913	4034	11385
76-148	2017	2869	9230
196-295	1658	2465	8202

THE THRUST LOADS SHOWN ARE CALCULATED AS SOLELY A THRUST LOAD DYNAMICALLY BALANCED AND ACTING THROUGH THE OUTPUT SHAFT AXIS.

WHERE AN OVERHUNG LOAD IS ALSO PRESENT THE RESULTANT LOAD WILL BE THE SUM OF THE TWO LOADS.

ESR9, 10 & 11 FEET ON MOTOR DIMENSIONS

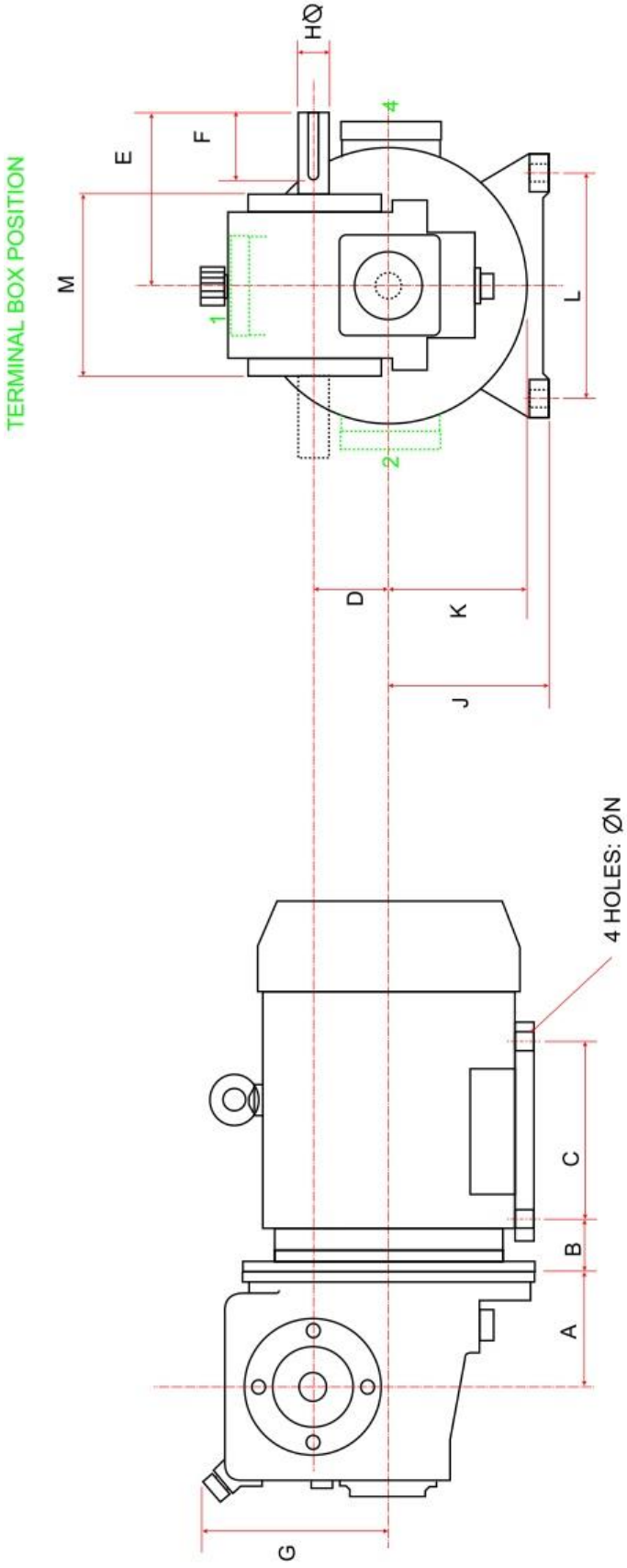

ESR	A	D	E	F	G	H	SHAFT KEY	K	M
9	51	31.75	82	33	90	16k6	5 x 5	66.5	82
10	60.3	44.5	105	40	106	19j6	6 x 6	82.5	108
11	95	63.5	144.5	50	145	28k6	8 x 7	108	140

	A	B	C	J	L
	D63	D71	D80	D90S	D90L
9	40	58			
10		45	62	68	68
11			50	56	56

	B	C	J	L
	D63	D71	D80	D90S	D90L	D63	D71	D80	D90S	D90L	D63	D71	D80	D90S	D90L
9		80	90	100	125	63	71	80	90	90	100	112	121	140	140

ESR9, 10 & 11 FEET ON GEARBOX DIMENSION

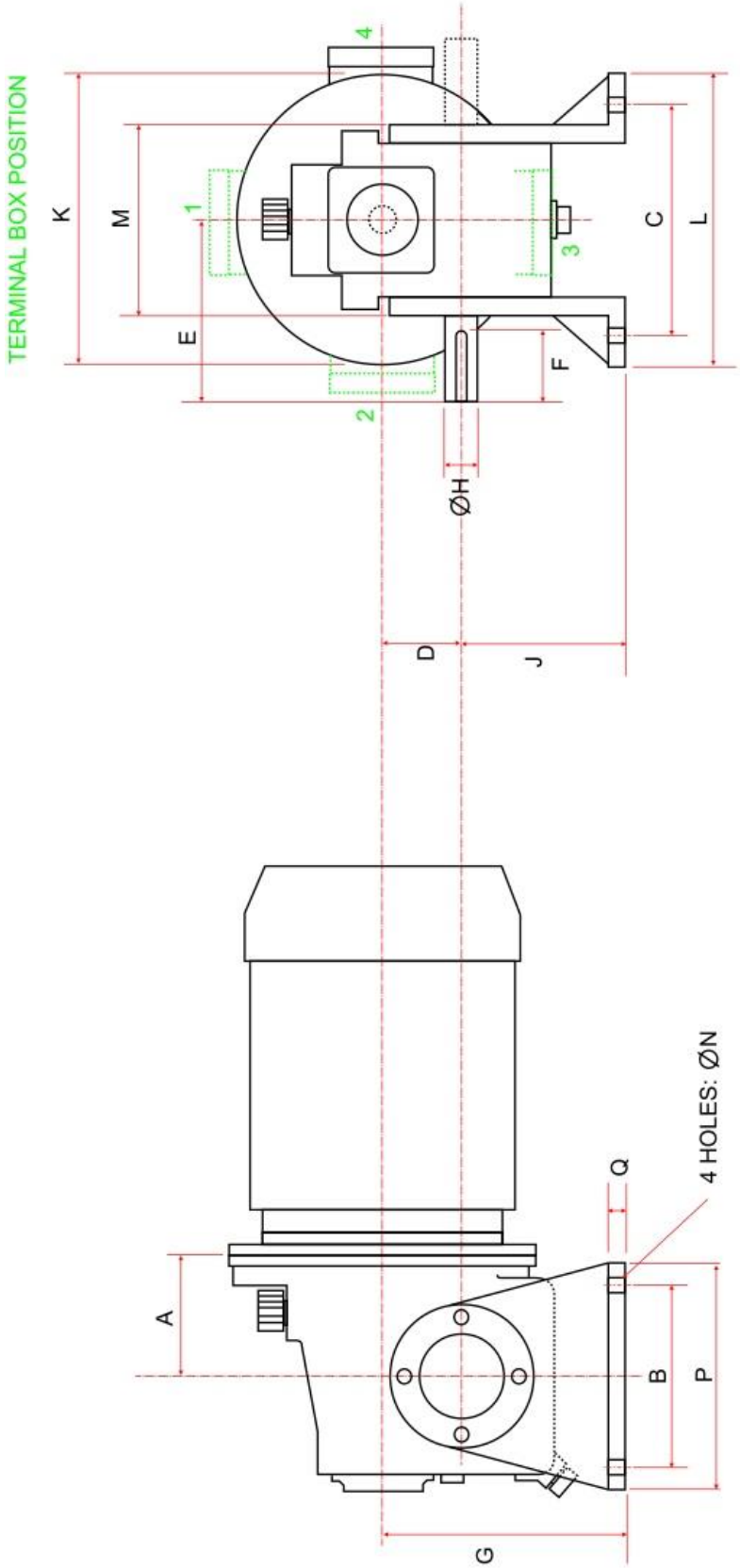

ESR	A	B	C	D	E	F	G	H	SHAFT KEY	J	K	L	M	N	P	Q
9	51	60	106	31.75	82	33	81.75	16k6	5 x 5	50	133	126	82	7	76	8
10	60.3	57	136.5	44.5	105	40	114.5	19j6	6 x 6	70	165	165	108	10	111	9.5
11	95	101.5	181	63.5	144.5	50	146	28k6	8 x 7	82.5	216	216	140	13.5	152	11

ESR9, 10 AND 11 FLANGE DIMENSION SHEET

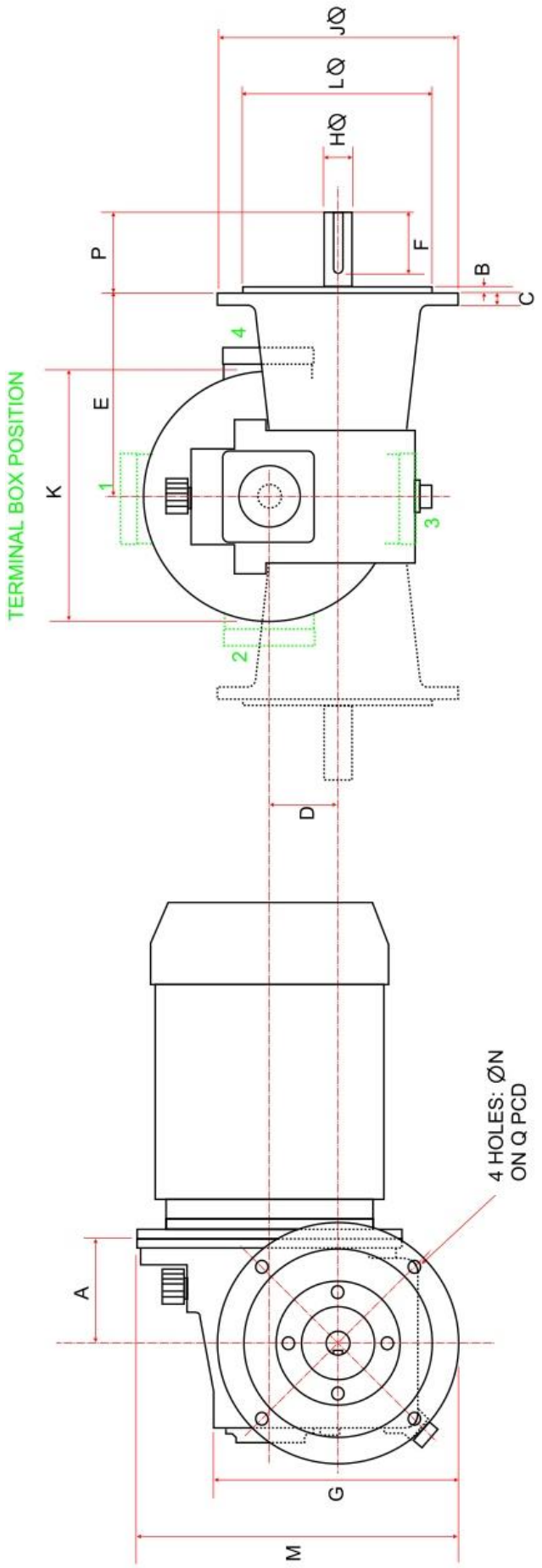

ESR	A	B	C	D	E	F	G	H	SHAFT KEY	J	K	L	M	N	P	Q
9	51	3	9.5	31.75	117	33	128.5	16k6	5 x 5	127	133	89	162	7	41	108
10	60.3	3	12	44.5	165	40	162	19j6	6 x 6	165	165	120.6	210	9	51	140
11	95	5	12	63.5	204	50	216	28k6	8 x 7	216	216	165	279	10.5	70	190.5

ERA33 AND 44 FOOT DIMENSION SHEET

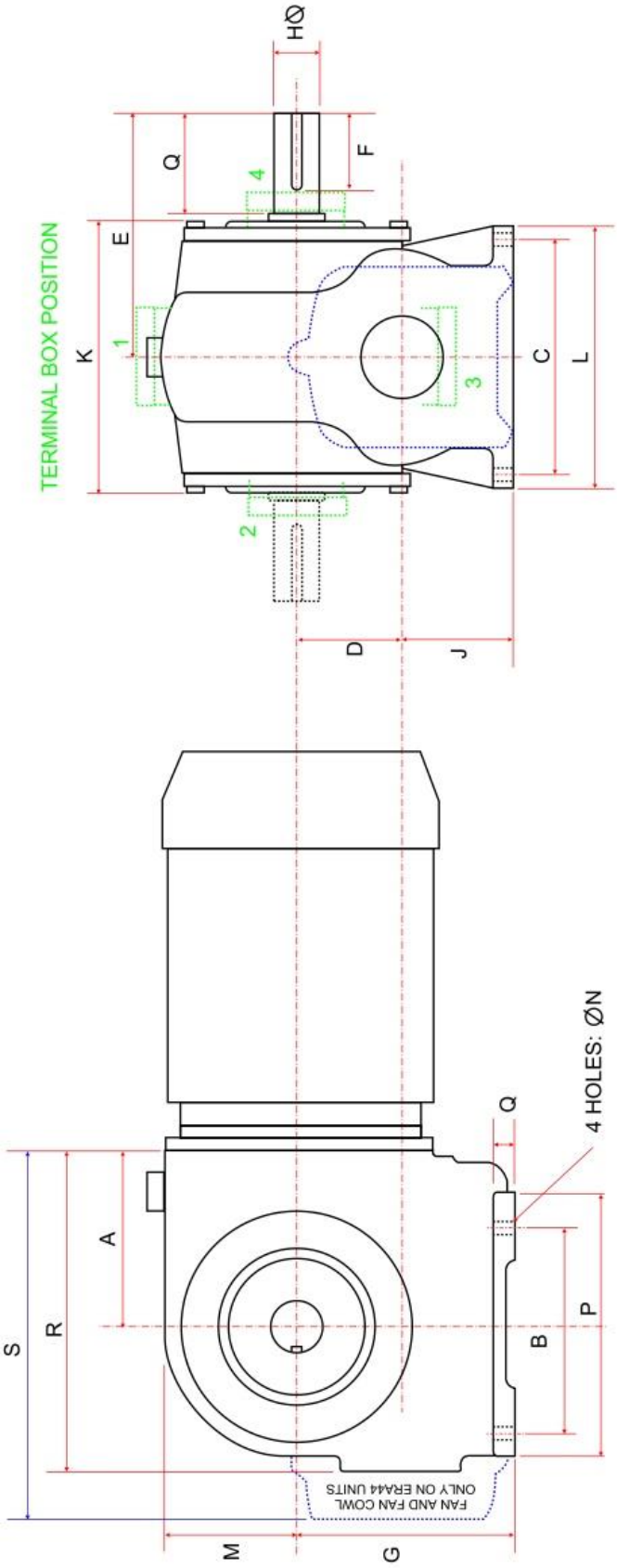

ERA	A	B	C	D	E	F	G	H	SHAFT KEY	J	K	L	M	N	P	Q	R	S
33	127	152	172	76.2	182	70	160	38k6	10 x 8	83.8	200	200	100	13	196	80	239	
44	206	216	203	101.6	216	88	210	48k6	14 x 9	108.4	244	254	127	21	267	89		416

ERA33 AND 44 FLANGE DIMENSION SHEET

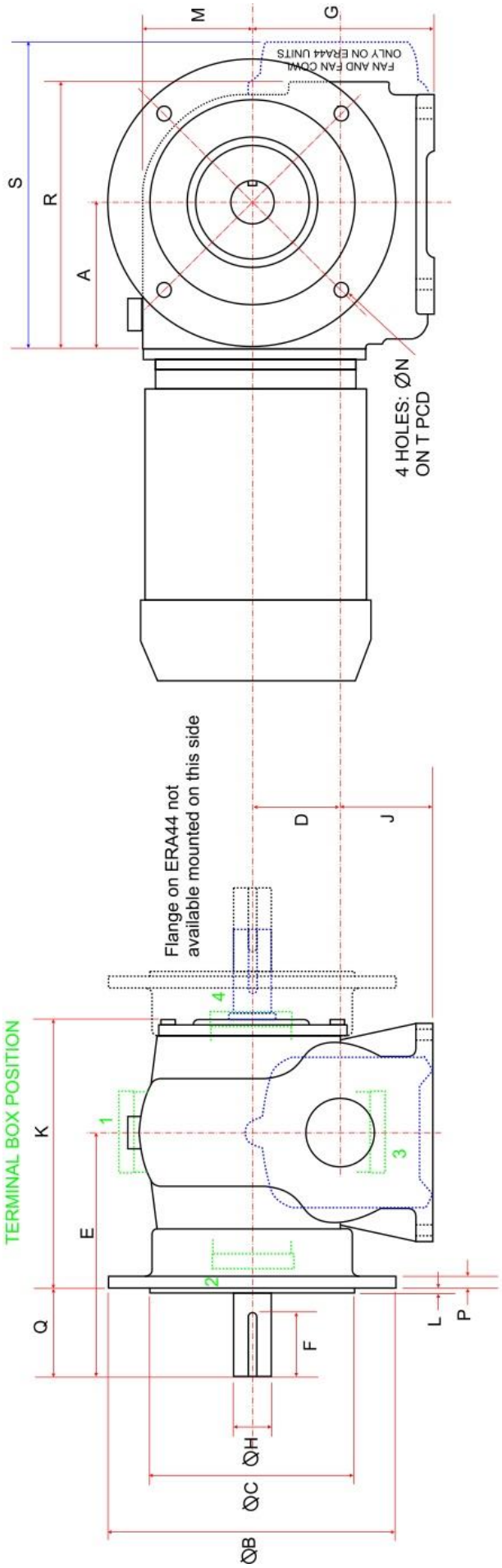

ERA	A	B	C	D	E	F	G	H	SHAFT KEY	J
33	127	250	180h8	76.2	230	70	160	38k6	10 x 8	83.8
44	206	350	250h8	101.6	282	95	210	48k6	14 x 9	108.4
	K	L	M	N	P	Q	R	S	T	
33	350	4	100	15	16	80	239		215	
44	416	5	127	17	19	110		416	300	

INTENTIONALLY LEFT BLANK

4. CONTRA-ROTATING INLINE GEARBOXES

TWIN SHAFTS

ONE ROTATING WITHIN THE OTHER IN OPPOSITE DIRECTIONS

SHAFTS CAN ROTATE AT DIFFERENT SPEEDS

MOUNTING POSITIONS

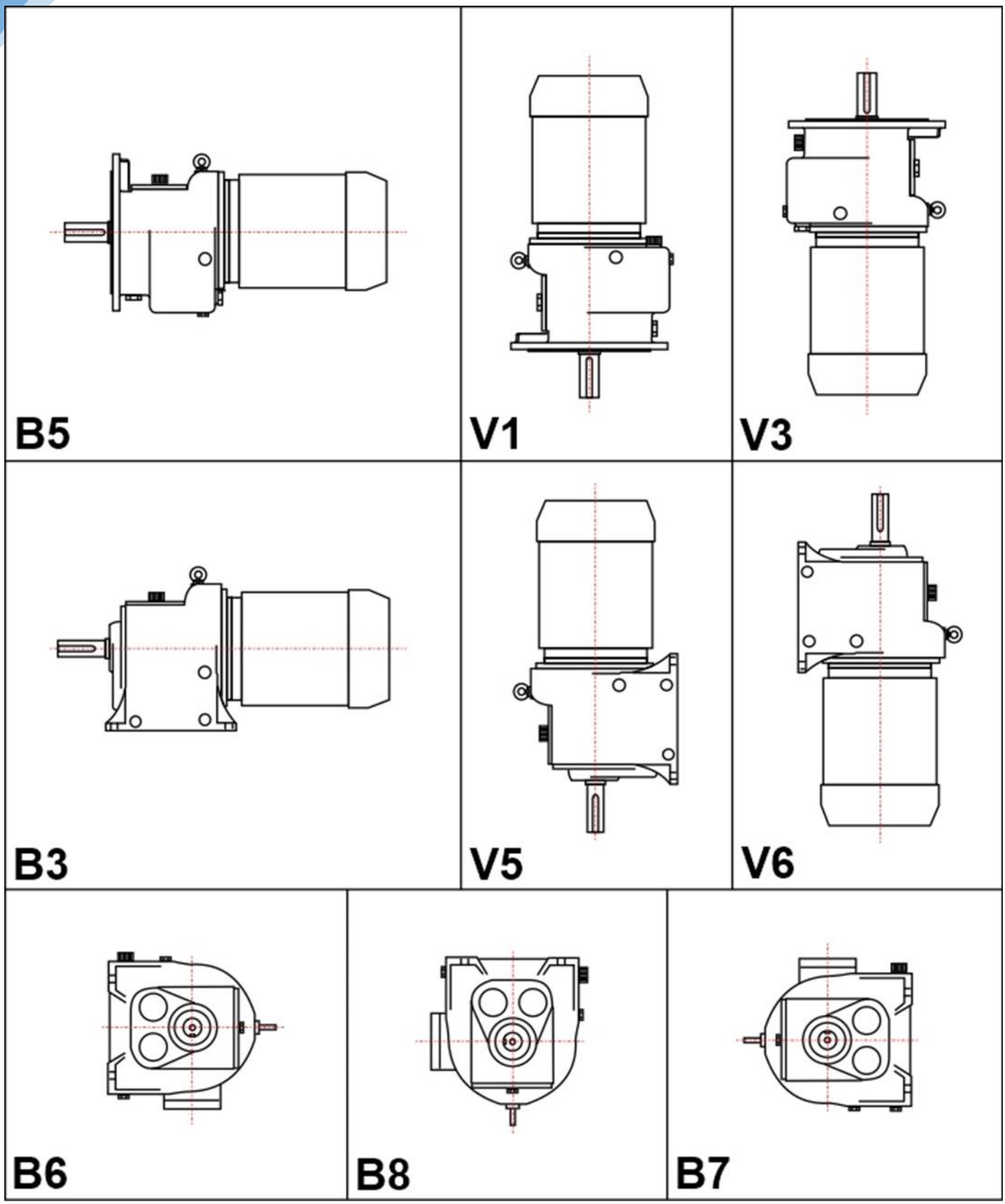

CONTRA-ROTATING CO-AXIAL SHAFT GEARBOXES

Particularly suited to applications where materials or liquids are mixed, this range of gearboxes provides two concentric output shafts in the form of a hollow shaft, with a solid internal shaft rotating in the opposite direction. Fully sealed against oil leakages these shafts revolve at the same speed or in a 2:1 ratio with each other as standard.

The design, construction and choice of materials are based on the need for optimum performance combined with maximum durability under arduous conditions. High tensile steel output shafts are fitted as standard but units can be provided with shafts in other materials, for example stainless steel, to meet specific requirements. Special oil seals can be fitted where units are mounted on pressure or vacuum vessels.

Both foot and flange mounted units are designed to accept IEC motors although can be adapted for NEMA units.

Although there is a limited range of ratios the contra-rotating unit is built using modified casings from the ESR range which means that other units from or range can be fitted to make a compound unit giving unlimited ratios.

The Disco Variable Speed Mechanical Drive Unit can also be fitted to these units giving you the ability to vary the output speed, this is particularly useful in mixing units when varying viscosity/weight substances are in use. The Disco Drive Unit, being a mechanical unit, increases torque the lower the speed, which is of great use when mixing thicker liquids.

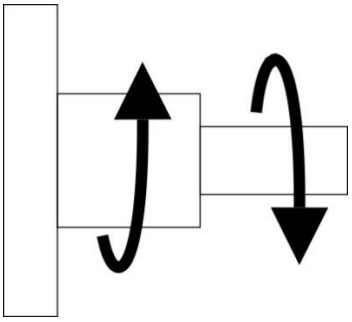

SHAFTS ROTATE IN OPPOSITE DIRECTIONS AS SHOWN, BOTH AT THE SAME SPEED OR WITH THE OUTER SHAFT AT HALF THE SPEED OF THE INNER SHAFT, AS STANDARD. WHERE REQUIRED OTHER SPEED DIFFERENTIALS BETWEEN INNER AND OUTER SHAFTS ARE AVAILABLE ON REQUEST

OUTPUT SPEEDS AND TORQUE (BOTH SHAFT SAME SPEED)

NOMINAL INPUT RPM	NOMINAL OUTPUT SPEED (RPM) INNER SHAFT/OUTER SHAFT	GEAR RATIO /1	MOTOR SIZE (kW)																				
			TORQUE (Nm)																				
			0.18	0.25	0.37	0.55	0.75	1.1	1.5	2.2	3	4	5.5	7.5	11	15	18.5	22	30	37	45	55	75
			12	17	25	3.8	5	7.3	9.9	14	20	26	36	49	71	97	120	142	194	238	289	354	482
750	29.82	25.15	24.84	24.84	24.84	24.84	24.84	25.28	25.28	25.20	25.20	25.20	25.10	25.10	25.10								
			14.90	21.11	31.05	47.20	62.10	92.28	125.15	176.40	252.00	327.60	451.87	615.05	891.19								
			14.90	21.11	31.05	47.20	62.10	92.28	125.15	176.40	252.00	327.60	451.87	615.05	891.19								
750	34.17	21.95	21.85	21.85	21.85	21.85	21.85	21.82	21.82	21.92	21.92	21.92	22.53	22.53	21.92	21.92							
			13.11	18.57	27.31	41.51	54.61	79.63	107.99	153.42	219.18	284.93	405.61	552.08	778.33	1063.35							
			13.11	18.57	27.31	41.51	54.61	79.63	107.99	153.42	219.18	284.93	405.61	552.08	778.33	1063.35							
1000	39.76	25.15	24.84	24.84	24.84	24.84	24.84	25.28	25.28	25.20	25.20	25.20	25.10	25.10	25.10	25.10							
			14.90	21.11	31.05	47.20	62.10	92.28	125.15	176.40	252.00	327.60	451.87	615.05	891.19	1217.55							
			14.90	21.11	31.05	47.20	62.10	92.28	125.15	176.40	252.00	327.60	451.87	615.05	891.19	1217.55							
1000	45.56	21.95	21.85	21.85	21.85	21.85	21.85	21.85	21.82	21.82	21.92	21.92	21.92	22.53	22.53	21.92							
			13.11	18.57	27.31	41.51	54.61	79.74	107.99	152.71	219.18	284.93	394.52	552.08	799.95	1063.35							
			13.11	18.57	27.31	41.51	54.61	79.74	107.99	152.71	219.18	284.93	394.52	552.08	799.95	1063.35							
1000	51.81	19.30	19.35	19.35	19.35	19.35	19.35	19.35	19.40	19.40	19.33	19.33	19.33	18.88	18.88	18.37	18.37						
			11.61	16.45	24.19	36.77	48.38	70.63	96.03	135.80	193.26	251.24	347.87	462.50	670.15	890.82	1102.04						
			11.61	16.45	24.19	36.77	48.38	70.63	96.03	135.80	193.26	251.24	347.87	462.50	670.15	890.82	1102.04						
1500	59.64	25.15	24.84	24.84	24.84	24.84	24.84	24.84	25.28	25.28	25.28	25.20	25.20	25.10	25.10	25.10	25.10						
			14.90	21.11	31.05	47.20	62.10	90.67	125.15	176.97	252.82	327.60	453.60	615.05	891.19	1217.55	1506.24						
			14.90	21.11	31.05	47.20	62.10	90.67	125.15	176.97	252.82	327.60	453.60	615.05	891.19	1217.55	1506.24						
1500	68.34	21.95	21.85	21.85	21.85	21.85	21.85	21.85	21.85	21.82	21.82	21.92	21.92	21.92	22.53	22.53	21.92	21.92					
			13.11	18.57	27.31	41.51	54.61	79.74	108.14	152.71	218.16	284.93	394.52	536.98	799.95	1092.89	1315.49	1556.66					
			13.11	18.57	27.31	41.51	54.61	79.74	108.14	152.71	218.16	284.93	394.52	536.98	799.95	1092.89	1315.49	1556.66					
1500	77.72	19.30	19.35	19.35	19.35	19.35	19.35	19.35	19.35	19.40	19.40	19.33	19.33	19.33	18.88	18.88	18.88	18.37					
			11.61	16.45	24.19	36.77	48.38	70.63	95.78	135.80	194.00	251.24	347.87	473.49	670.15	915.56	1132.65	1304.08					
			11.61	16.45	24.19	36.77	48.38	70.63	95.78	135.80	194.00	251.24	347.87	473.49	670.15	915.56	1132.65	1304.08					
1500	87.46	17.15	17.45	17.45	17.45	17.45	17.45	17.45	17.45	17.28	17.28	17.28	17.28	17.28	17.54	17.54	17.54	17.06	17.06				
			10.47	14.83	21.81	33.15	43.62	63.68	86.36	120.96	172.80	224.64	311.04	423.36	622.63	850.64	1052.34	1211.61	1655.30				
			10.47	14.83	21.81	33.15	43.62	63.68	86.36	120.96	172.80	224.64	311.04	423.36	622.63	850.64	1052.34	1211.61	1655.30				
1500	97.72	15.35	15.46	15.46	15.46	15.46	15.46	15.46	15.46	15.53	15.53	15.53	15.46	15.46	15.64	15.64	15.64	15.21	15.21				
			9.27	13.14	19.32	29.36	38.64	56.41	76.50	108.68	155.25	201.83	278.35	378.86	555.11	758.39	938.21	1080.21	1475.79				
			9.27	13.14	19.32	29.36	38.64	56.41	76.50	108.68	155.25	201.83	278.35	378.86	555.11	758.39	938.21	1080.21	1475.79				
1500	108.54	13.82	13.94	13.94	13.94	13.94	13.94	13.94	13.94	13.89	13.89	13.89	13.95	13.95	13.95	14.23	14.23	14.23	13.85				
			8.36	11.85	17.42	26.48	34.84	50.86	68.98	97.20	138.86	180.51	251.10	341.78	495.23	690.19	853.85	1010.38	1343.08				
			8.36	11.85	17.42	26.48	34.84	50.86	68.98	97.20	138.86	180.51	251.10	341.78	495.23	690.19	853.85	1010.38	1343.08				
1500	120.19	12.48	12.39	12.39	12.39	12.39	12.39	12.39	12.39	12.39	12.51	12.51	12.46	12.46	12.46	13.12	13.12	13.12	12.76	12.76			
			7.43	10.53	15.49	23.54	30.97	45.22	61.32	86.72	125.05	162.57	224.31	305.31	442.38	636.15	786.98	931.26	1237.90	1518.67			
			7.43	10.53	15.49	23.54	30.97	45.22	61.32	86.72	125.05	162.57	224.31	305.31	442.38	636.15	786.98	931.26	1237.90	1518.67			
1500	132.16	11.35	11.40	11.40	11.40	11.40	11.40	11.40	11.40	11.40	11.34	11.34	11.38	11.38	11.38	11.28	11.28	11.28	10.97	10.97			
			6.84	9.69	14.25	21.66	28.50	41.61	56.43	79.80	113.40	147.42	204.81	278.78	403.94	546.90	676.57	800.61	1064.23	1305.60			
			6.84	9.69	14.25	21.66	28.50	41.61	56.43	79.80	113.40	147.42	204.81	278.78	403.94	546.90	676.57	800.61	1064.23	1305.60			
1500	145.35	10.32	10.23	10.23	10.23	10.23	10.23	10.23	10.23	10.23	10.30	10.30	10.30	10.26	10.26	10.57	10.57	10.57	10.57	10.29			
			6.14	8.70	12.79	19.44	25.58	37.35	50.65	71.62	102.98	133.87	185.36	251.37	364.23	512.71	634.29	750.57	1025.43	1224.00			
			6.14	8.70	12.79	19.44	25.58	37.35	50.65	71.62	102.98	133.87	185.36	251.37	364.23	512.71	634.29	750.57	1025.43	1224.00			
1500	159.07	9.43	9.45	9.45	9.45	9.45	9.45	9.45	9.45	9.45	9.48	9.48	9.48	9.41	9.41	9.58	9.58	9.58	9.58	9.32	9.32		
			5.67	8.03	11.81	17.96	23.63	34.49	46.78	66.15	94.80	123.24	170.64	230.46	333.93	464.65	574.82	680.21	929.29	1109.25	1346.95		
			5.67	8.03	11.81	17.96	23.63	34.49	46.78	66.15	94.80	123.24	170.64	230.46	333.93	464.65	574.82	680.21	929.29	1109.25	1346.95		
1500	174.22	8.61	8.54	8.54	8.54	8.54	8.54	8.54	8.54	8.54	8.55	8.55	8.55	8.61	8.61	8.96	8.96	8.96	8.96	8.71	8.71		
			5.12	7.26	10.67	16.23	21.35	31.17	42.27	59.78	85.50	111.15	153.90	210.85	305.52	434.38	537.38	635.90	868.77	1037.00	1259.21		
			5.12	7.26	10.67	16.23	21.35	31.17	42.27	59.78	85.50	111.15	153.90	210.85	305.52	434.38	537.38	635.90	868.77	1037.00	1259.21		
1500	184.73	8.12	8.19	8.19	8.19	8.19	8.19	8.19	8.19	8.19	8.16	8.16	8.16	8.20	8.20	7.96	7.96	7.96	7.96	7.96	7.96		
			4.91	6.96	10.24	15.56	20.48	29.90	40.54	57.34	81.61	106.10	146.91	200.88	291.07	386.02	477.55	565.10	772.04	947.14	1150.10		
			4.91	6.96	10.24	15.56	20.48	29.90	40.54	57.34	81.61	106.10	146.91	200.88	291.07	386.02	477.55	565.10	772.04	947.14	1150.10		
1500	204.64	7.33	7.28	7.28	7.28	7.28	7.28	7.28	7.28	7.28	7.28	7.35	7.35	7.32	7.32	7.32	7.36	7.36	7.36	7.36	7.36	7.36	
			4.37	6.19	9.10	13.83	18.20	26.58	36.04	50.97	72.81	95.55	132.30	179.45	260.02	355.23	441.87	522.88	714.36	876.38	1064.17	1303.52	
			4.37	6.19	9.10	13.83	18.20	26.58	36.04	50.97	72.81	95.55	132.30	179.45	260.02	355.23	441.87	522.88	714.36	876.38	1064.17	1303.52	
1500	225.23	6.66	6.70	6.70	6.70	6.70	6.70	6.70	6.70	6.70	6.70	6.67	6.67	6.69	6.69	6.69	6.60	6.60	6.60	6.60	6.60	6.60	
			4.02	5.70	8.38	12.73	16.75	24.46	33.17	46.90	67.00	86.65	119.97	163.85	237.42	324.36	396.19	468.83	640.51	785.78	954.16	1168.76	
			4.02	5.70	8.38	12.73	16.75	24.46	33.17	46.90	67.00	86.65	119.97	163.85	237.42	324.36	396.19	468.83	640.51	785.78	954.16	1168.76	
1500	247.52	6.06	6.01	6.01	6.01	6.01	6.01	6.01	6.01	6.01	6.01	6.05	6.05	6.03	6.03	6.03	6.19	6.19	6.19	6.19	6.19	6.19	
			3.61	5.11	7.52	11.43	15.03	21.95	29.77	42.10	60.14	78.68	108.95	147.75	214.08	292.48	371.43	439.52	600.48	736.67	894.52	1095.71	
			3.61	5.11	7.52	11.43	15.03	21.95	29.77	42.10	60.14	78.68	108.95	147.75	214.08	292.48	371.43	439.52	600.48	736.67	894.52	1095.71	
1500	270.76	5.54	5.55	5.55	5.55	5.55	5.55	5.55	5.55	5.55	5.55	5.57	5.57	5.53	5.53	5.53	5.61	5.61	5.61	5.61	5.61	5.61	5.61
			3.33	4.72	6.94	10.55	13.89	20.27	27.49	38.88	55.54	72.44	100.30	135.45	196.27	268.14	336.61	398.32	544.18	667.60	810.66	992.99	1352.04
			3.33	4.72	6.94	10.55	13.89	20.27	27.49	38.88	55.54	72.44	100.30	135.45	196.27	268.14	336.61	398.32	544.18	667.60	810.66	992.99	1352.04
1500	296.44	5.06	5.02	5.02	5.02	5.02	5.02	5.02	5.02	5.02	5.02	5.03	5.03	5.06	5.06	5.06	5.04	5.04	5.04	5.04	5.04	5.04	5.04
			3.01	4.27	6.27	9.54	12.55	18.32	24.85	35.13	50.19	65.33	90.46	123.93	179.57	245.33	302.45	357.90	488.96	599.86	728.40	892.22	1214.84
			3.01	4.27	6.27	9.54	12.55	18.32	24.85	35.13	50.19	65.33	90.46	123.93	179.57	245.33	302.45	357.90	488.96	599.86	728.40	892.22	1214.84
	GEARBOX SIZE		1							2		3		35	4		425					45	

*720RPM (8 POLE MOTOR) INPUT
†960RPM (6 POLE MOTOR) INPUT

.	ACTUAL RATIO /1
****.**	OUTER SHAFT OUTPUT TORQUE (Nm)
****.**	INNER SHAFT OUTPUT TORQUE (Nm)

OUTPUT TORQUE FIGURES QUOTED ARE BASED ON EACH SHAFT TRANSMITTING 50% OF AVAILABLE POWER. THESE ARE THEORETICAL FIGURES AND DO NOT ALLOW FOR ANY MECHANICAL LOSSES.

DISCO DRIVES (KING'S LYNN) LIMITED, OLDMEDOW ROAD, HARDWICK INDUSTRIAL ESTATE, KING'S LYNN, NORFOLK. PE30 4LE.
TEL: +44(0)1553 761331, FAX: +44(0)1553 692137, WEB: www.discodrives.co.uk, EMAIL: sales@discodrives.co.uk

OUTPUT SPEEDS AND TORQUE (OUTER SHAFT HALF SPEED)

NOMINAL INPUT RPM	NOMINAL OUTPUT SPEED (RPM) OUTER	NOMINAL OUTPUT SPEED (RPM) INNER	OUTER GEAR RATIO /1	MOTOR SIZE (kW)																			
				TORQUE (Nm)																			
			INNER GEAR RATIO /1	0.18	0.25	0.37	0.55	0.75	1.1	1.5	2.2	3	4	5.5	7.5	11	15	18.5	22	30	37	45	55	75
				12	17	2.5	3.8	5	7.3	9.9	14	20	26	36	49	71	97	120	142	194	238	289	354	482
750	29.82	59.64	25.15	24.84 12.42 19.87 9.94	24.84 12.42 28.15 14.08	24.84 12.42 41.40 20.70	24.84 12.42 62.93 31.46	25.28 12.64 84.27 42.14	25.28 12.64 123.04 61.52	25.20 12.60 166.32 83.16	25.20 12.60 235.20 117.60	25.20 12.60 336.00 168.00	25.10 12.55 435.14 217.57	25.10 12.55 602.50 301.25	25.10 12.55 820.07 410.03										
			12.58																					
750	34.17	68.34	21.95	21.85 10.92 17.48 8.74	21.85 10.92 24.76 12.38	21.85 10.92 36.41 18.20	21.85 10.92 55.34 27.67	21.82 10.91 72.72 36.36	21.82 10.91 106.17 53.09	21.92 10.96 144.66 72.33	21.92 10.96 204.56 102.28	21.92 10.96 292.24 146.12	22.53 11.27 390.59 195.29	22.53 11.27 540.81 270.41	22.53 11.27 736.11 368.05	21.92 10.96 1037.77 518.89									
			10.98																					
1000	39.76	79.52	25.15	24.84 12.42 19.87 9.94	24.84 12.42 28.15 14.08	24.84 12.42 41.40 20.70	24.84 12.42 62.93 31.46	24.84 12.42 82.80 41.40	25.28 12.64 123.04 61.52	25.28 12.64 166.86 83.43	25.20 12.60 235.20 117.60	25.20 12.60 336.00 168.00	25.20 12.60 436.80 218.40	25.10 12.55 602.50 301.25	25.10 12.55 820.07 410.03	25.10 12.55 1188.26 594.13									
			12.58																					
1000	45.56	91.12	21.95	21.85 10.92 17.48 8.74	21.85 10.92 24.76 12.38	21.85 10.92 36.41 18.20	21.85 10.92 55.34 27.67	21.85 10.92 72.82 36.41	21.82 10.91 106.17 53.09	21.82 10.91 143.99 71.99	21.92 10.96 204.56 102.28	21.92 10.96 292.24 146.12	21.92 10.96 379.91 189.95	22.53 11.27 540.81 270.41	22.53 11.27 736.11 368.05	21.92 10.96 1037.77 518.89									
			10.98																					
1000	51.81	103.63	19.30	19.35 9.68 15.48 7.74	19.35 9.68 21.93 10.97	19.35 9.68 32.25 16.13	19.35 9.68 49.02 24.51	19.35 9.68 64.50 32.25	19.40 9.70 94.41 47.21	19.40 9.70 128.04 64.02	19.33 9.66 180.38 90.19	19.33 9.66 257.68 128.84	19.33 9.66 334.99 167.49	18.88 9.44 453.06 226.53	18.88 9.44 616.67 308.33	18.37 9.18 869.39 434.69	18.37 9.18 1187.76 593.88							
			9.65																					
1500	59.64	119.28	25.15	24.84 12.42 19.87 9.94	24.84 12.42 28.15 14.08	24.84 12.42 41.40 20.70	24.84 12.42 62.93 31.46	24.84 12.42 82.80 41.40	25.28 12.64 123.04 61.52	25.28 12.64 166.86 83.43	25.28 12.64 235.96 117.98	25.20 12.60 336.00 168.00	25.20 12.60 436.80 218.40	25.20 12.60 604.80 302.40	25.10 12.55 820.07 410.03	25.10 12.55 1188.26 594.13	25.10 12.55 1623.40 811.70							
			12.58																					
1500	68.34	136.67	21.95	21.85 10.92 17.48 8.74	21.85 10.92 24.76 12.38	21.85 10.92 36.41 18.20	21.85 10.92 55.34 27.67	21.85 10.92 72.82 36.41	21.85 10.92 106.31 53.16	21.82 10.91 143.99 71.99	21.82 10.91 203.62 101.81	21.92 10.96 292.24 146.12	21.92 10.96 379.91 189.95	21.92 10.96 526.02 263.01	22.53 11.27 736.11 368.05	22.53 11.27 1066.60 533.30	21.92 10.96 1417.80 708.90	21.92 10.96 1753.98 876.99						
			10.98																					
1500	77.72	155.44	19.30	19.35 9.68 15.48 7.74	19.35 9.68 21.93 10.97	19.35 9.68 32.25 16.13	19.35 9.68 49.02 24.51	19.35 9.68 64.50 32.25	19.35 9.68 94.17 47.09	19.40 9.70 128.04 64.02	19.40 9.70 181.07 90.53	19.33 9.66 257.68 128.84	19.33 9.66 334.99 167.49	19.33 9.66 463.83 231.92	18.88 9.44 616.67 308.33	18.88 9.44 893.54 446.77	18.37 9.18 1187.76 593.88	18.37 9.18 1469.39 734.69						
			9.65																					
1500	87.46	174.93	17.15	17.45 8.72 13.96 6.98	17.45 8.72 19.77 9.89	17.45 8.72 29.08 14.54	17.45 8.72 44.20 22.10	17.45 8.72 58.15 29.08	17.45 8.72 84.90 42.45	17.28 8.64 114.05 57.02	17.28 8.64 161.28 80.64	17.28 8.64 230.40 115.20	17.28 8.64 299.52 149.76	17.28 8.64 414.72 207.36	17.28 8.64 564.48 282.24	17.54 8.77 830.18 415.09	17.54 8.77 1134.19 567.09	17.06 8.53 1365.19 682.60	17.06 8.53 1615.48 807.74					
			8.58																					
1500	97.72	195.44	15.35	15.46 7.73 12.36 6.18	15.46 7.73 17.52 8.76	15.46 7.73 25.76 12.88	15.46 7.73 39.15 19.58	15.46 7.73 51.52 25.76	15.46 7.73 75.22 37.61	15.53 7.76 102.47 51.23	15.53 7.76 144.90 72.45	15.53 7.76 207.00 103.50	15.46 7.73 268.04 134.02	15.46 7.73 371.13 185.56	15.46 7.73 505.15 252.57	15.64 7.82 740.15 370.07	15.64 7.82 1011.19 505.59	15.21 7.61 1217.14 608.57	15.21 7.61 1440.29 720.14					
			7.68																					
1500	108.54	217.08	13.82	13.94 6.97 11.15 5.57	13.94 6.97 15.79 7.90	13.94 6.97 23.23 11.61	13.94 6.97 35.30 17.65	13.94 6.97 46.45 23.23	13.94 6.97 67.82 33.91	13.94 6.97 91.97 45.99	13.89 6.94 129.60 64.80	13.89 6.94 185.14 92.57	13.95 6.98 241.80 120.90	13.95 6.98 334.80 167.40	13.95 6.98 455.70 227.85	14.23 7.12 673.59 336.79	14.23 7.12 920.26 460.13	13.85 6.92 1107.69 553.85	13.85 6.92 1310.77 655.38					
			6.91																					
1500	120.19	240.38	12.48	12.39 6.19 9.91 4.96	12.39 6.19 14.04 7.02	12.39 6.19 20.65 10.32	12.39 6.19 31.38 15.69	12.39 6.19 41.29 20.65	12.39 6.19 60.29 30.14	12.39 6.19 81.76 40.88	12.51 6.25 116.72 58.36	12.51 6.25 166.74 83.37	12.46 6.23 216.00 108.00	12.46 6.23 299.08 149.54	12.46 6.23 407.08 203.54	13.12 6.56 620.84 310.42	13.12 6.56 848.19 424.10	13.12 6.56 1049.31 524.66	12.76 6.38 1208.13 604.06	12.76 6.38 1650.54 825.27				
			6.24																					
1500	132.16	264.32	11.35	11.40 5.70 9.12 4.56	11.40 5.70 12.92 6.46	11.40 5.70 19.00 9.50	11.40 5.70 28.88 14.44	11.40 5.70 38.00 19.00	11.40 5.70 55.48 27.74	11.40 5.70 75.24 37.62	11.34 5.67 105.84 52.92	11.34 5.67 151.20 75.60	11.34 5.67 196.56 98.28	11.38 5.69 273.09 136.54	11.38 5.69 371.70 185.85	11.28 5.64 533.74 266.87	11.28 5.64 729.19 364.60	11.28 5.64 902.10 451.05	10.97 5.49 1038.63 519.31	10.97 5.49 1418.97 709.49				
			5.68																					
1500	145.35	290.70	10.32	10.23 5.12 8.19 4.09	10.23 5.12 11.60 5.80	10.23 5.12 17.05 8.53	10.23 5.12 25.92 12.96	10.23 5.12 34.11 17.05	10.23 5.12 49.79 24.90	10.23 5.12 67.53 33.76	10.30 5.15 96.11 48.06	10.30 5.15 137.30 68.65	10.30 5.15 178.49 89.25	10.26 5.13 246.24 123.12	10.26 5.13 335.16 167.58	10.26 5.13 485.64 242.82	10.57 5.29 683.62 341.81	10.57 5.29 845.71 422.86	10.57 5.29 1000.76 500.38	10.29 5.14 1330.29 665.14				
			5.16																					
1500	159.07	318.13	9.43	9.45 4.73 7.56 3.78	9.45 4.73 10.71 5.36	9.45 4.73 15.75 7.88	9.45 4.73 23.94 11.97	9.45 4.73 31.50 15.75	9.45 4.73 45.99 23.00	9.45 4.73 62.37 31.19	9.48 4.74 88.48 44.24	9.48 4.74 126.40 63.20	9.48 4.74 164.32 82.16	9.41 4.70 225.75 112.88	9.41 4.70 307.28 153.64	9.41 4.70 445.24 222.62	9.58 4.79 619.53 309.76	9.58 4.79 766.43 383.21	9.58 4.79 906.94 453.47	9.32 4.66 1205.57 602.79	9.32 4.66 1479.00 739.50			
			4.72																					
1500	174.22	348.43	8.61	8.54 4.27 6.83 3.42	8.54 4.27 9.68 4.84	8.54 4.27 14.23 7.12	8.54 4.27 21.63 10.82	8.54 4.27 28.47 14.23	8.54 4.27 41.56 20.78	8.54 4.27 56.36 28.18	8.55 4.28 79.80 39.90	8.55 4.28 114.00 57.00	8.55 4.28 148.20 74.10	8.61 4.30 206.55 103.28	8.61 4.30 281.14 140.57	8.61 4.30 407.36 203.68	8.96 4.48 579.18 289.59	8.96 4.48 716.51 358.25	8.96 4.48 847.87 423.93	8.71 4.36 1127.05 563.52	8.71 4.36 1382.67 691.33			
			4.31																					
1500	184.73	369.46	8.12	8.19 4.10 6.55 3.28	8.19 4.10 9.28 4.64	8.19 4.10 13.65 6.83	8.19 4.10 20.75 10.37	8.19 4.10 27.30 13.65	8.19 4.10 39.86 19.93	8.19 4.10 54.06 27.03	8.19 4.10 76.45 38.22	8.16 4.08 108.82 54.41	8.16 4.08 141.47 70.73	8.20 4.10 196.78 98.39	8.20 4.10 267.84 133.92	8.20 4.10 388.10 194.05	7.96 3.98 514.69 257.35	7.96 3.98 636.73 318.37	7.96 3.98 753.47 376.73	7.96 3.98 1029.39 514.69	7.96 3.98 1262.86 631.43			
			4.06																					
1500	204.64	409.28	7.33	7.28 3.64 5.83 2.91	7.28 3.64 8.25 4.13	7.28 3.64 12.14 6.07	7.28 3.64 18.45 9.22	7.28 3.64 24.27 12.14	7.28 3.64 35.44 17.72	7.28 3.64 48.06 24.03	7.28 3.64 67.96 33.98	7.35 3.68 98.00 49.00	7.35 3.68 127.40 63.70	7.32 3.66 175.79 87.89	7.32 3.66 239.26 119.63	7.32 3.66 346.69 173.34	7.32 3.66 473.65 236.82	7.36 3.68 589.16 294.58	7.36 3.68 697.18 348.59	7.36 3.68 952.48 476.24	7.36 3.68 1168.51 584.25	7.36 3.68 1418.90 709.45		
			3.67																					
1500	225.23	450.45	6.66	6.70 3.35 5.36 2.68	6.70 3.35 7.59 3.80	6.70 3.35 11.17 5.58	6.70 3.35 16.97 8.49	6.70 3.35 22.33 11.17	6.70 3.35 32.61 16.30	6.70 3.35 44.22 22.11	6.70 3.35 62.54 31.27	6.67 3.33 88.87 44.43	6.67 3.33 115.53 57.77	6.67 3.33 159.97 79.98	6.69 3.34 218.47 109.24	6.69 3.34 316.56 158.28	6.69 3.34 432.48 216.24	6.60 3.30 528.25 264.13	6.60 3.30 625.10 312.55	6.60 3.30 854.01 427.01	6.60 3.30 1047.70 523.85	6.60 3.30 1272.21 636.11		
			3.33																					
1500	247.52	495.05	6.06	6.01 3.01 4.81 2.41	6.01 3.01 6.82 3.41	6.01 3.01 10.02 5.01	6.01 3.01 15.23 7.62	6.01 3.01 20.05 10.02	6.01 3.01 29.27 14.63	6.01 3.01 39.69 19.85	6.01 3.01 56.13 28.06	6.01 3.01 80.18 40.09	6.05 3.03 104.91 52.46	6.05 3.03 145.26 72.63	6.03 3.02 196.99 98.50	6.03 3.02 285.44 142.72	6.03 3.02 389.97 194.98	6.19 3.10 495.24 247.62	6.19 3.10 586.03 293.02	6.19 3.10 800.63 400.32	6.19 3.10 982.22 491.11	6.19 3.10 1192.70 596.35	6.19 3.10 1460.95 730.48	
			3.03																					
1500	270.76	541.52	5.54	5.55 2.78 4.44 2.22	5.55 2.78 6.29 3.15	5.55 2.78 9.26 4.63	5.55 2.78 14.07 7.04	5.55 2.78 18.51 9.26	5.55 2.78 27.03 13.52	5.55 2.78 36.66 18.33	5.55 2.78 51.84 25.92	5.55 2.78 74.06 37.03	5.57 2.79 96.58 48.29	5.57 2.79 133.73 66.86	5.53 2.76 180.61 90.30	5.53 2.76 261.69 130.85	5.53 2.76 357.53 178.76	5.61 2.81 448.81 224.40	5.61 2.81 531.09 265.55	5.61 2.81 725.58 362.79	5.61 2.81 890.14 445.07	5.61 2.81 1080.88 540.44	5.61 2.81 1323.99 661.99	
			2.77																					
1500	296.44	592.89	5.06	5.02 2.51 4.02 2.01	5.02 2.51 5.69 2.84	5.02 2.51 8.37 4.18	5.02 2.51 12.72 6.36	5.02 2.51 16.73 8.37	5.02 2.51 24.43 12.21	5.02 2.51 33.13 16.56	5.02 2.51 46.85 23.42	5.02 2.51 66.92 33.46	5.03 2.51 87.11 43.55	5.03 2.51 120.61 60.30	5.06 2.53 165.24 82.62	5.06 2.53 239.43 119.72	5.06 2.53 327.11 163.56	5.04 2.52 403.27 201.63	5.04 2.52 477.20 238.60	5.04 2.52 651.95 325.97	5.04 2.52 799.81 399.90	5.04 2.52 971.20 485.60	5.04 2.52 1189.63 594.82	5.04 2.52 1619.78 809.89
			2.53																					
		GEARBOX SIZE		1							2		3		35	4		425				45		

*720RPM (8 POLE MOTOR) INPUT
†960RPM (6 POLE MOTOR) INPUT

.	OUTER SHAFT ACTUAL
.	INNER SHAFT ACTUAL RATIO /1
****.**	OUTER SHAFT OUTPUT TORQUE (Nm)
****.**	INNER SHAFT OUTPUT TORQUE (Nm)

OUTPUT TORQUE FIGURES QUOTED ARE BASED ON OUTER SHAFT TRANSMITTING TWICE THATOF INNER SHAFT AND OF THE WHOLE UNIT TRANSMITTING 100% OF AVAILABLE POWER. THESE ARE THEORETICAL FIGURES AND DO NOT ALLOW FOR ANY

DISCO DRIVES (KING'S LYNN) LIMITED, OLDMEDOW ROAD, HARDWICK INDUSTRIAL ESTATE, KING'S LYNN, NORFOLK. PE30 4LE.
TEL: +44(0)1553 761331, FAX: +44(0)1553 692137, WEB: www.discodrives.co.uk, EMAIL: sales@discodrives.co.uk

FOOT MOUNTED DIMENSIONS

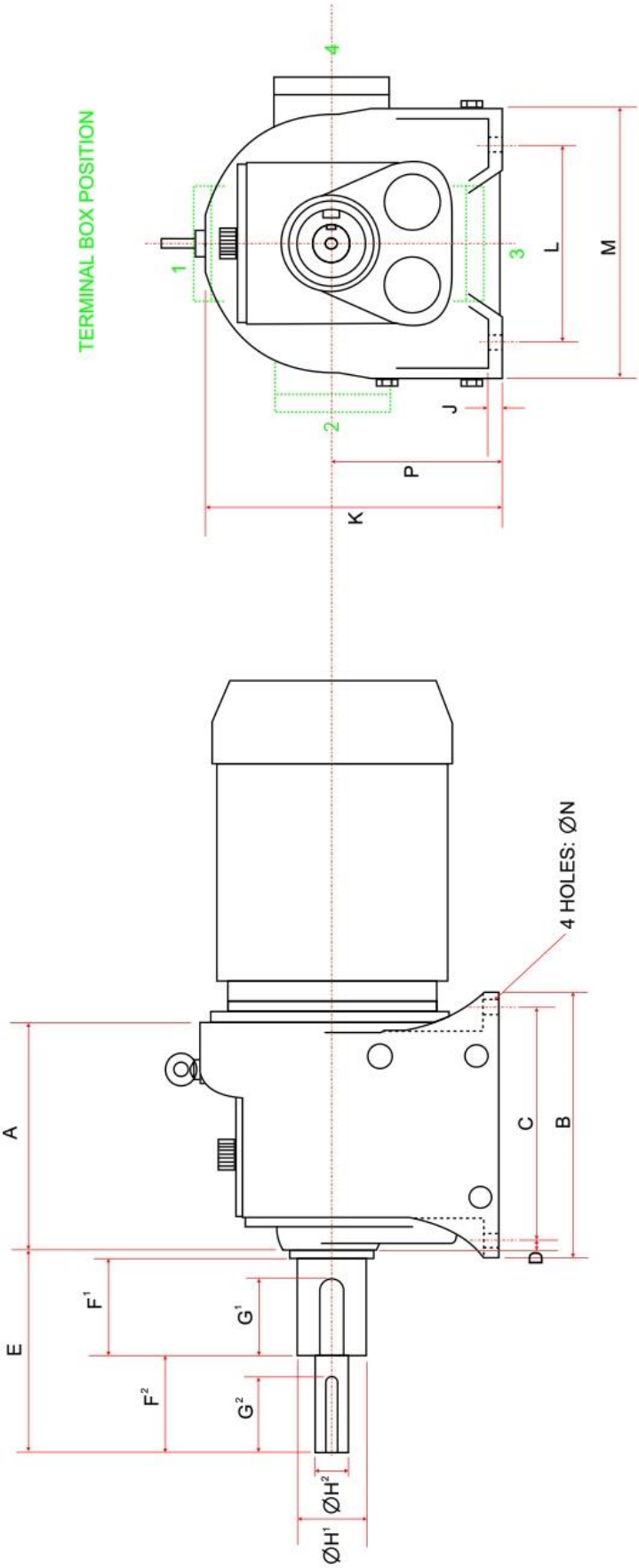

ECR	A	B	C	D	E	F1	F2	G1	G2	H1	H2	SHAFT KEY1	SHAFT KEY2	SHAFT HOLE	J	K	L	M	N	P
1	177	197	171.5	32	78	42	34	32	32	42g6	19f6	8 x 7	6 x 6	M8 x 9	11	200	127	184	11	117.5
2	214	238	206	34	105	51	51	45	48	50g6	28f6	8 x 7	8 x 7	M10 x 22	12.5	254	165	228.5	15	146
3	286	305	267	37	133	67	63	57	57	65g6	38f7	10 x 8	10 x 8	M12 x 28	17	340	222	305	17	194
35	357	349	311	94	178	86	89	72	75	90g6	55e7	16 x 10	14 x 9	M20 x 42	19	406	280	368	18	229
4	398	391	343	108	217	108	108	102	105	110g6	65e7	18 x 11	18 x 11	M20 x 42	21	489	330	445	20	286
425	540	521	457	133	283	140	140	114	130	140g6	85e7	36 x 20	22 x 14	M20 x 42	25	610	444	572	24	356
45	649	686	610	113	319	166	150	130	130	150g6	100e7	36 x 20	28 x 16	M24 x 50	32	724	482	635	27	419

FLANGE MOUNTED DIMENSIONS

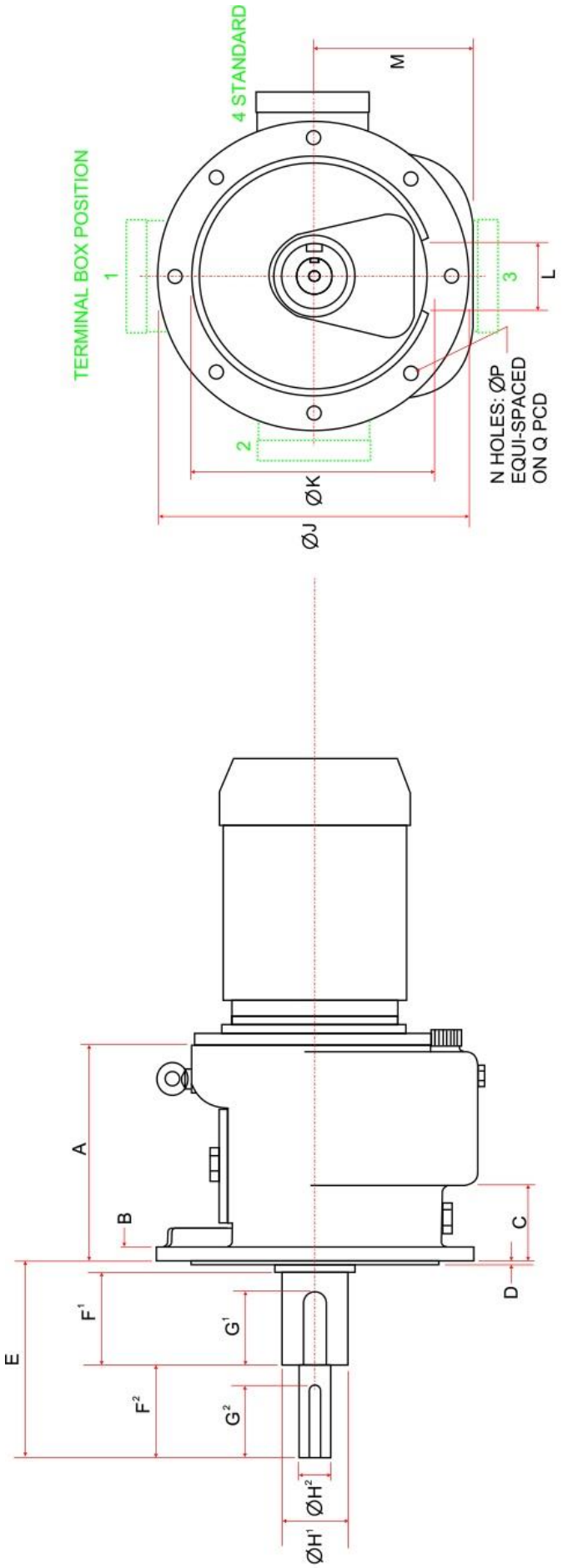

ECRV	A	B	C	D	E	F¹	F²	G¹	G²	H¹	H²	SHAFT KEY¹	SHAFT KEY²	SHAFT HOLE	J	K	L	M	N	P	Q
1	155	16	53	4	100	42	34	32	32	42g6	19f6	8 x 7	6 x 6	M8 x 9	250	180h8	132	116	4	13	215
2	189	20	65	4	130	51	51	45	48	50g6	28f6	8 x 7	8 x 7	M10 x 22	300	230h8	140	143	4	15	265
3	255	25	87	5	164	67	63	57	57	65g6	38f7	10 x 8	10 x 8	M12 x 28	400	300h8	N/A	191	4	19	350
35	306	20	105	5	229	86	89	72	75	90g6	55e7	16 x 10	14 x 9	M20 x 42	450	350h8	N/A	224	8	19	400
4	335	35	135	5	280	108	108	102	105	110g6	65e7	18 x 11	18 x 11	M20 x 42	550	450h8	250	282	8	19	500
425	480	44	190	6	343	140	140	114	130	140g6	85e7	36 x 20	22 x 14	M20 x 42	660	550h8	N/A	347	8	24	600
45	578	44	196	6	390	166	150	130	130	150g6	100e7	36 x 20	28 x 16	M24 x 50	800	680h8	N/A	414	8	24	740

INTENTIONALLY LEFT BLANK

5. DISCO MECHANICAL VARIABLE SPEED UNITS

INFINITELY VARIABLE INLINE DRIVE

MOUNTING POSITIONS

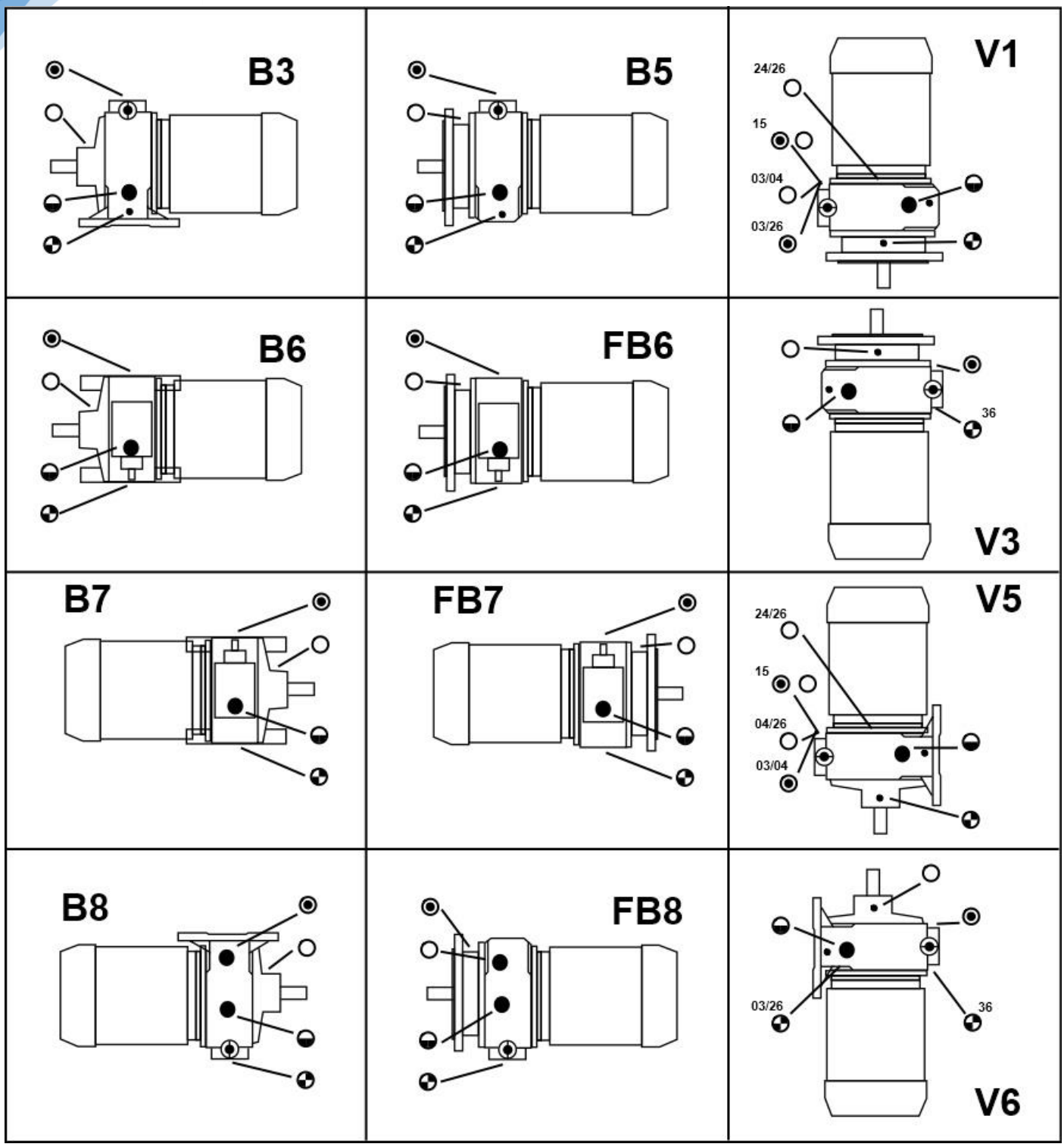

BREATHER
OIL LEVEL
OIL DRAIN
OIL FILL

Disco units can be supplied in any of the positions shown opposite. Positons V3 and V6 are non-preferred. Required mounting position must be stated when ordering to enable correct positioning of level and drain plugs etc.

Units are supplied **OIL FREE** but oil can be supplied separately and at extra cost. Units must be filled with correct grade and quantity before operation.

ORDERING

When ordering disco units please provide the following information:

1. Reference for type of unit required as shown on pages 81 and 85.
2. When required with motor; power, speed and supply
3. Output speed range
4. Mounting position
5. Standard, indicator or special hand wheel control

NOTE. Disco Mechanical Variable Drive Units are **NOT** able to be ATEX safe area certified.

INTRODUCTION

The **DISCO DRIVE** is a well proven variable speed traction drive, simple in construction. All the power transmission parts in the **DISCO DRIVE** are manufactured from specialist steels, precision finished and ground to fine limits to ensure high efficiency and long working life. The unit is dynamically balanced and shafts are carried on ball bearings of ample size. **DISCO DRIVE** units are quiet and free from vibration and run relatively cool running. Wear in the transmission parts is minimal and even if the unit runs at fixed speeds for long periods, though this is not recommended.

Being totally enclosed, dustproof and oil tight only the minimum amount of maintenance is required. Shafts are co-axial and run in the same direction as input, but the unit may be driven in either direction.

Mounting positions can be horizontal, vertical or at angle to the horizontal or vertical according to the requirements.

DISCO DRIVE UNITS can be found in all industries across the world and are **MANUFACTURED IN ENGLAND.**

The range of sizes and unlimited choice of assembly variations enable the **DISCO MECHANICAL VARIABLE SPEED DRIVE UNIT** to be applied or built into any mechanized equipment, large or small, where smooth, step less variation is required.

The **DISCO MECHANICAL VARIABLE SPEED DRIVE UNIT** is not ATEX hazardous area certified.

Thousands of these units are giving continuous and efficient service on all types of machinery and equipment including:

CONVEYORS
MACHINE TOOLS
PAPER MAKING AND CONVERTING MACHINES
PACKAGING MACHINES
CHEMICAL AND PAINT MIXERS
AGITATORS
FOOD PROCESSING
PRINTING AND EMBOSSING MACHINES
WELDING MACHINES
EXTRUDERS
PETROLEUM AND OIL REFINERIES
RESEARCH AND SCIENTIFIC APPARATUS
TEXTILE MACHINES
CARPET MANUFACTURE
CEMENT AND BRICK AND TILE PLANTS
PUMP DRIVES
BOILER SOLID FUEL FEED UNITS
POWER PLANTS

PRINCIPLE OF OPERATION

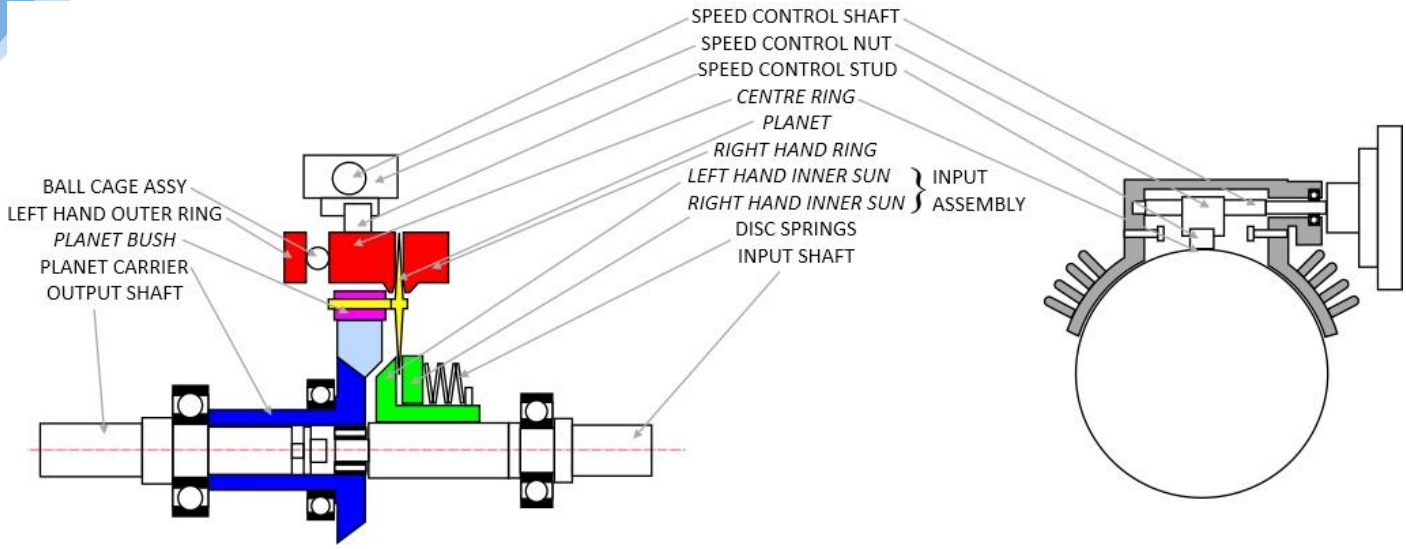

N.B. ITEMS IN ITALICS ARE RECOMMENDED SPARES AND SHOULD BE CHANGED TOGETHER AS THESES ARE ALL PRECISION GROUND COMPONENTS THAT INTERACT.

The co-axial input and output shafts are supported by ball bearings. The disc springs compress the right and left hand suns so that contact is being made with the planets. At the same time the planets make contact with the outer rings. The bushes supporting the planets are fitted in the planet carrier which is keyed to the output shaft. The input assembly is keyed to the input shaft and power is transmitted via the planets, planet bushes and planet carrier to the output shaft. When the input shaft is driven the planets are revolved around their own axis by the input assembly and simultaneously roll against the outer rings. The planets also revolve around the input assembly in the same direction as the input shaft.

Speed change is effected by turning the centre outer ring, located in the housing under the speed control shaft, nut and stud. Both the centre and left hand outer rings are cam faced and a ball cage with steel balls is positioned between them for ease of adjustment. As the centre ring is turned a simultaneous axial movement is made. This increases or decreases the gap between the centre and right hand outer rings which allow the planets to move. A combination of the change in speed of the planet around its own axis and its radial position around the input assembly produces a change in output speed.

TECHNICAL DATA

1 EFFICIENCY

Efficiency under full load at 1420 RPM input, average value for all sizes:

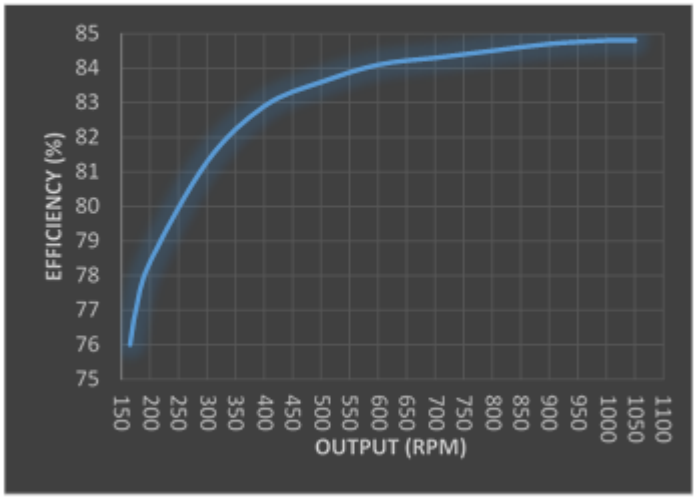

2 OUTPUT POWER

The allowable output power decreases with the reduction in the output speed. Typical curve as shown (1420 RPM input):

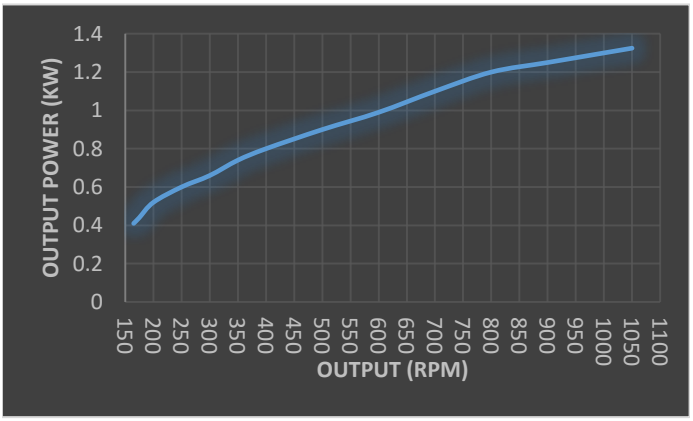

3 OUTPUT TORQUE

The allowable output increases with the reduction in the output speed. Typical curve as shown (1420 RPM input):

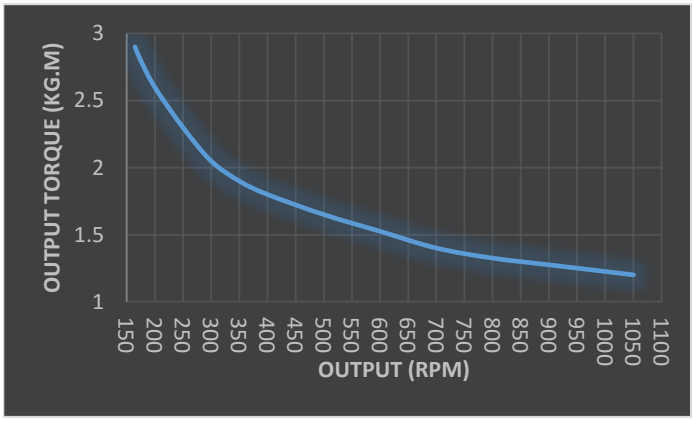

4 SLIP

Slip $\left(\frac{\text{No load speed} - \text{Full load speed}}{\text{No load speed}}\right)$ x 100% is shown as average value for all sizes (1420 RPM input):

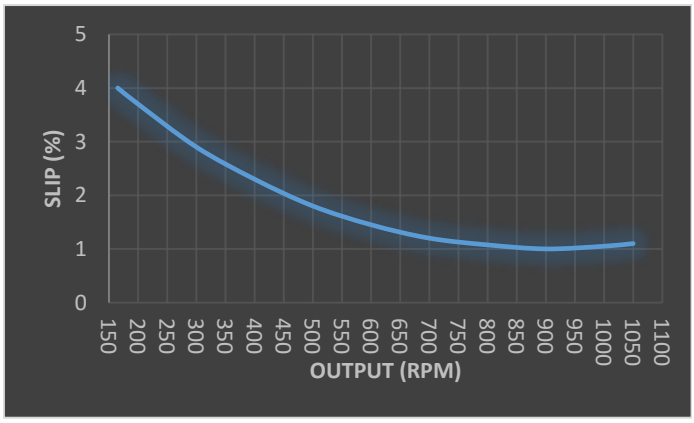

5 SPEED REGULATION

Typical curve as showing the number of revolutions of the hand wheel against output speed (1420 RPM input):

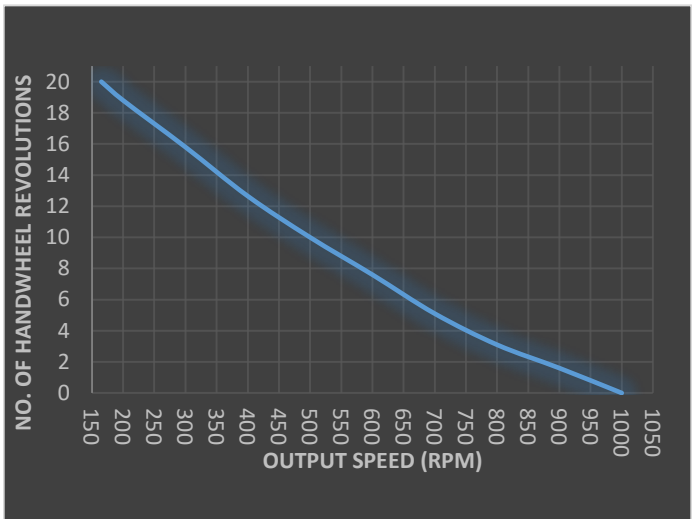

6 APPROXIMATE NO. OF REVOLUTIONS OF THE HAND WHEEL FOR FULL OUTPUT SPEED RANGE

UNIT SIZE	NO. OF REVOLUTIONS
02	11
03	16
04	18
15	19
24	20
24DD	20
26	20
26DD	20
36	28
46	27
48	27

UNIT SELECTION

In order to select the most suitable type of Disco Unit and assembly for a given application, it is first necessary to determine unit size for the required duty.

Although Disco design provides, in addition to the torques listed, a small margin for overloads and shocks which may unavoidably occur, consideration should be given to the kind of machinery the Disco will drive and reference made to the following table of load factors. Disco Drive Units are **NOT** ATEX certified.

TABLE OF LOAD FACTORS

	FACTOR K		
	Hours of continuous duty		
	2-8	**8-16**	**16-24**
Nature of load			
Uniform load, not intermittent. No charge of rotation. No accelerating masses	1.0	1.1	1.15
Light shock loads, intermittent drive. Frequent change of rotation. Small accelerating masses.	1.2	1.3	1.4
Light shock loads, intermittent drive. Frequent change of rotation. Large accelerating masses.	1.3	1.45	1.5
Heavy shock loads, intermittent drive. Frequent change of rotation. Large accelerating masses.	1.55	1.7	1.8

It is recommended that the normal power absorbed in the driven machine should be multiplied by the load **FACTOR K** given in the above table, this resultant figure can then be converted to torque and selection made from the torque tables below and opposite.
In the case of constant torque use the highest RPM of the driven machine.
In the case of constant power use the lowest RPM of the driven machine.
FORMULAE

$$T = \frac{974 \times KW}{N}$$

$$T = \frac{727 \times HP}{N}$$

T = Output Torque (KG.M)
N = Speed of Driven Machine (RPM)
KW = Power (Kilo Watt)
HP = Horse Power

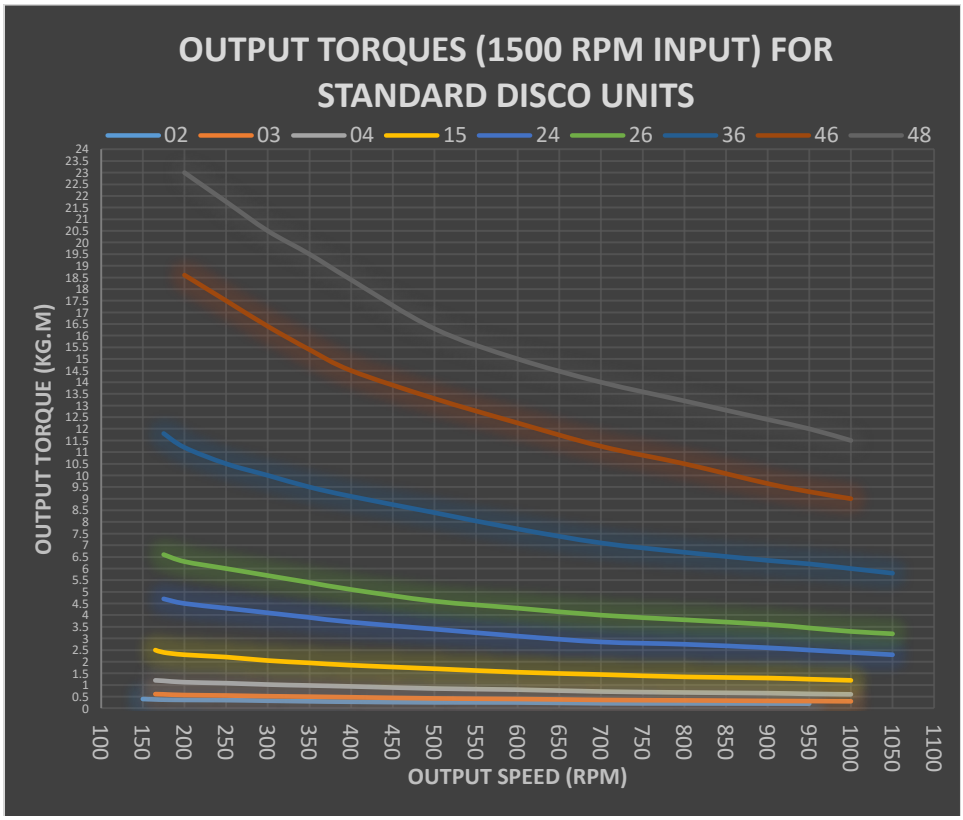

RATING AND SELECTION TABLE STANDARD DISCO UNITS

UNIT SIZE	INPUT POWER Kw	INPUT SPEED RPM.	OUTPUT RPM.		OUTPUT KG/M	
			MAX	MIN	AT MAX RPM	AT MIN RPM
02	0.18	1380	930	155	0.12	0.24
	0.18	880	600	100	0.2	0.4
	0.25	1380	930	155	0.2	0.4
	0.37	2810	1890	315	0.16	0.32
03	0.37	1380	960	160	0.3	0.6
	0.55	2810	1950	325	0.2	0.4
04	0.55	1400	1000	165	0.6	1.2
	0.55	920	660	110	0.6	1.2
	0.75	1420	1000	165	0.6	1.2
	1.10	2850	2030	340	0.45	0.9
15	1.10	1420	1000	165	0.9	2.4
	1.10	900	630	105	1.2	2.4
	1.50	1420	1000	165	1.2	2.4
	2.20	2850	2000	334	0.9	1.8
24	2.20	1420	1020	170	1.6	4.4
	2.20	945	675	113	2.2	4.4
	3.00	1420	1020	170	2.2	4.4
26	4.00	1420	1020	170	3.2	6.4
36	5.50	1445	1050	175	44	11.6
	5.50	955	690	115	5.8	11.6
	7.50	1445	1050	175	5.8	11.6
46	7.50	970	660	132	9	18
	11.00	1460	1000	200	9	18
48	11.00	970	660	132	12	24
	15.00	1470	1000	200	12	24

Prefix ‘F’ denotes Flange output mounting. Prefix ‘A’ denotes foot mounting, closed output faced.
For vertical mounting units ‘V’ is added after ‘A’ or ‘F’, e.g. FV04-B5/A is a vertical flange mounting unit.
B5/A indicates standard flange mounting motor fitted directly. Non-motorized units omit the B5/A.

Where lower output speeds are required, units can be supplied with foot or flange mounting reduction gearboxes, helical or worm type.

MOTORISED FOOT MOUNTING UNIT A-B5/A TYPE

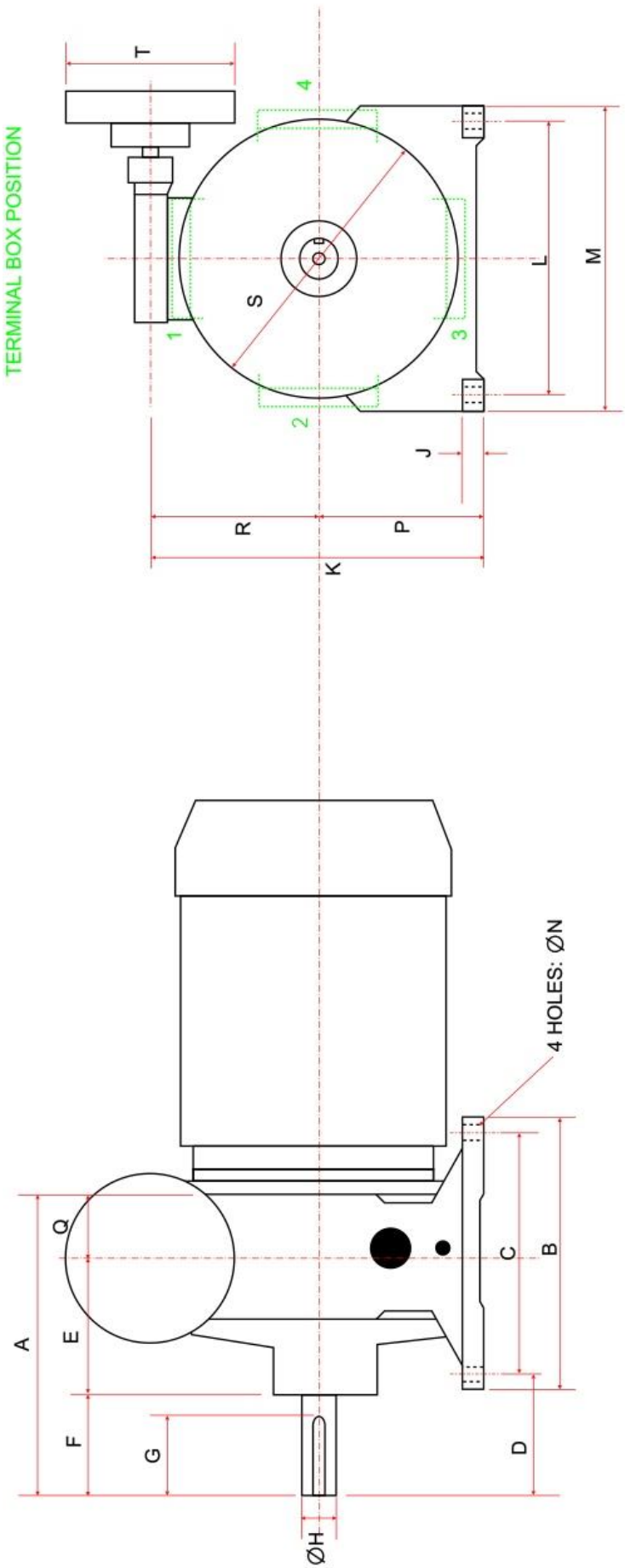

DISCO UNIT	A	B	C	D	E	F	G	H	SHAFT KEY	J	K	L	M	N	P	Q	R	S	T
03	148	120	100	40	78	30	25	14k6	5 x 5	11	167	120	150	10	80	40	87	160	75
04	189	120	100	60	91	40	32	19j6	6 x 6	14	200	150	200	12	100	58	100	200	96
15	247	140	115	90	113	60	45	28j6	8 x 7	15	245	205	230	12	125	74	120	240	96
24	277	252	220	57	135	60	50	28j6	8 x 7	23	298	255	290	14	150	82	148	290	96
26	277	252	220	57	135	60	50	28j6	8 x 7	23	298	255	290	14	15	82	148	290	96
36	320	290	255	75	140	80	56	38j6	10 x 8	22	368	320	355	18	180	100	188	365	130
46	380	330	280	80	148	110	80	42j6	12 x 8	30	431	375	410	18	215	122	216	420	130
48	380	330	280	80	148	110	80	42j6	12 x 8	30	431	375	410	18	215	122	216	420	130

MOTORISED FLANGE MOUNTING UNIT F-B5/A TYPE

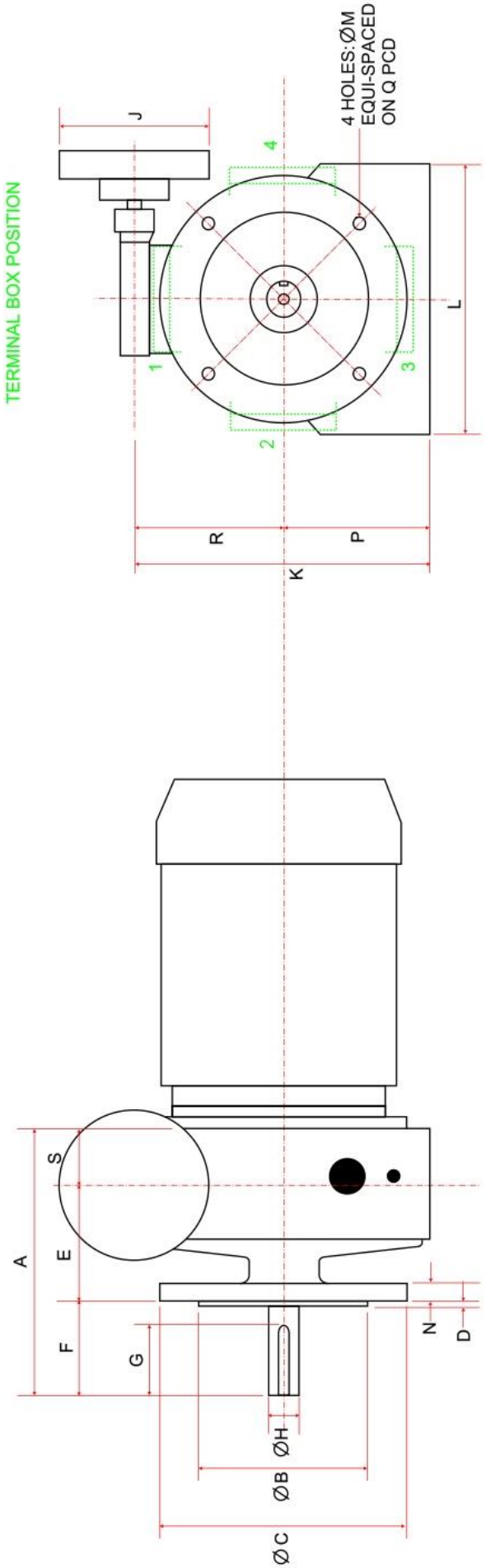

DISCO UNIT	A	B	C	D	E	F	G	H	SHAFT KEY	J	K	L	M	N	P	Q	R	S
03	148	110	160	3.5	80	30	25	14k6	5 x 5	75	167	150	10	10	80	130	87	40
04	189	130	200	3.5	90	40	32	19j6	6 x 6	96	200	200	12	12	100	165	100	58
15	247	180	250	4	113	60	45	28j6	8 x 7	96	245	230	14	16	125	215	120	74
24	277	180	250	4	136	60	50	28j6	8 x 7	96	298	290	14	16	150	215	148	82
26	277	180	250	4	136	60	50	28j6	8 x 7	96	298	290	14	16	150	215	148	82
36	320	230	300	4	140	80	56	38j6	10 x 8	130	368	355	14	20	180	265	188	100
46	380	250	350	5	148	110	80	42j6	12 x 8	130	431	410	18	20	215	300	216	122
48	380	250	350	5	148	110	80	42j6	12 x 8	130	431	410	18	20	215	300	216	122

NON-MOTORISED FOOT MOUNTING UNIT A TYPE

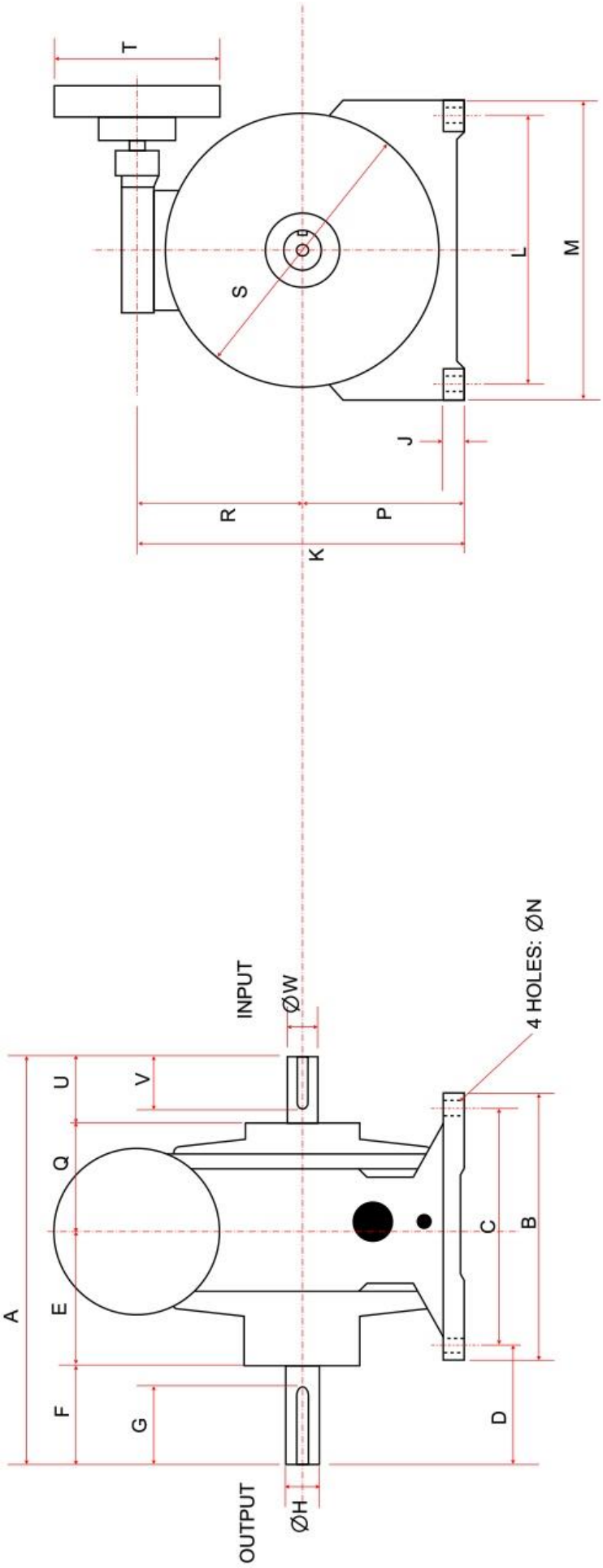

DISCO UNIT	A	B	C	D	E	F	OUTPUT G	OUTPUT H	OUTPUT SHAFT KEY	J	K	L	M	N	P	Q	R	S	T	U	INPUT V	INPUT W	INPUT SHAFT KEY
03	148	120	100	40	78	30	25	14k6	5 x 5	11	167	120	150	10	80	78	87	160	75	30	20	14k6	5 x 5
04	189	120	100	60	91	40	32	19j6	6 x 6	14	200	150	200	12	100	81	100	200	96	30	25	15j6	5 x 5
15	247	140	115	90	113	60	45	28j6	8 x 7	15	245	205	230	12	125	107	120	240	96	40	32	20j6	6 x 6
24	277	252	220	57	135	60	50	28j6	8 x 7	23	298	255	290	14	150	132	148	290	96	50	40	25j6	8 x 7
26	277	252	220	57	135	60	50	28j6	8 x 7	23	298	255	290	14	15	132	148	290	96	50	40	25j6	8 x 7
36	320	290	255	75	140	80	56	38j6	10 x 8	22	368	320	355	18	180	166	188	365	130	60	50	30j6	8 x 7
46	380	330	280	80	148	110	80	42j6	12 x 8	30	431	375	410	18	215	189	216	420	130	60	56	32j6	10 x 8
48	380	330	280	80	148	110	80	42j6	12 x 8	30	431	375	410	18	215	189	216	420	130	60	56	32j6	10 x 8

NON-MOTORISED FLANGE MOUNTING UNIT F TYPE

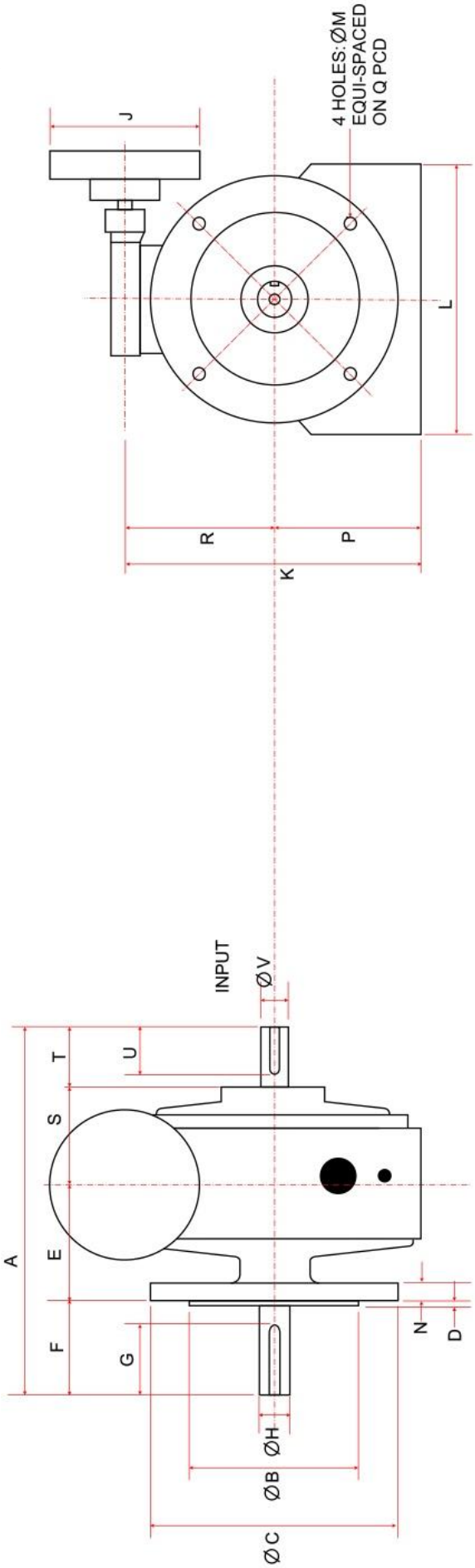

DISCO UNIT	A	B	C	D	E	F	OUTPUT G	OUTPUT H	OUTPUT SHAFT KEY	J	K	L	M	N	P	Q	R	S	T	INPUT U	INPUT V	INPUT SHAFT KEY
03	148	110	160	3.5	80	30	25	14k6	5 x 5	75	167	150	10	10	80	130	87	78	30	20	14k6	5 x 5
04	189	130	200	3.5	90	40	32	19j6	6 x 6	96	200	200	12	12	100	165	100	81	30	25	15j6	5 x 5
15	247	180	250	4	113	60	45	28j6	8 x 7	96	245	230	14	16	125	215	120	107	40	32	20j6	6 x 6
24	277	180	250	4	136	60	50	28j6	8 x 7	96	298	290	14	16	150	215	148	132	50	40	25j6	8 x 7
26	277	180	250	4	136	60	50	28j6	8 x 7	96	298	290	14	16	150	215	148	132	50	40	25j6	8 x 7
36	320	230	300	4	140	80	56	38j6	10 x 8	130	368	355	14	20	180	265	188	166	60	50	30j6	8 x 7
46	380	250	350	5	148	110	80	42j6	12 x 8	130	431	410	18	20	215	300	216	189	60	56	32j6	10 x 8
48	380	250	350	5	148	110	80	42j6	12 x 8	130	431	410	18	20	215	300	216	189	60	56	32j6	10 x 8

DISCO DIFFERENTIAL VARIABLE SPEED UNITS

The Disco Differential unit, which incorporates all the features of the standard Disco, is fitted with an epicyclic train of spur gears to give a wide output speed range of 0 to 900rpm when driven at 1360rpm.

A constant input speed of 1360rpm is transmitted to both the Disco Variable Speed unit and the planetary spur gears through a common extended input shaft. In the standard Disco a variable speed of 165 to 1000rpm is produced at the planet carrier. This variable output speed is transmitted to the spur gear planet carrier.
The inner sun gear turns at a constant speed, the planet gears turn at a variable speed as driven by the Disco planet carrier. The outer sun is therefore driven at a variable speed which depends on the differential speed relationship between the spur gear inner sun and planets.
A small change in speed of the Disco Variable Speed unit produced by the variation of load is increased due to the characteristics of the planetary drive. An increase in load produces a reduction in speed. At a constant load it is possible to run the drive without any fluctuation of speed.
Both input and output shaft rotate in the same direction. Units may be driven in either direction.

RATING AND SELECTION TABLE DISCO DIFFERENTIAL UNITS

UNIT SIZE	INPUT POWER Kw	INPUT SPEED RPM.	OUTPUT RPM.	
			MAX RPM	Nm AT MAX RPM
†04DD	0.55	1400	1000	4.71
	0.75	1420	1000	4.71
	1.10	2850	2030	3.43
†15DD	1.10	900	630	9.41
	1.50	1420	1000	9.41
24DD	2.20	945	675	18.63
	3.00	1420	1020	18.63
26DD	4.00	1420	1020	26.48

*03DD, 36DD, 46DD and 48DD are all now obsolete.

† Parts are non-stock items. Long lead times expected.

Prefix 'F' denotes Flange output mounting. Prefix 'A' denotes foot mounting, closed output faced.
For vertical mounting units 'V' is added after 'A' or 'F', e.g. FV04-B5/A is a vertical flange mounting unit.
B5/A indicates standard flange mounting motor fitted directly. Non-motorized units omit the B5/A.

Where lower output speeds are required, units can be supplied with foot or flange mounting reduction gearboxes, helical or worm type.

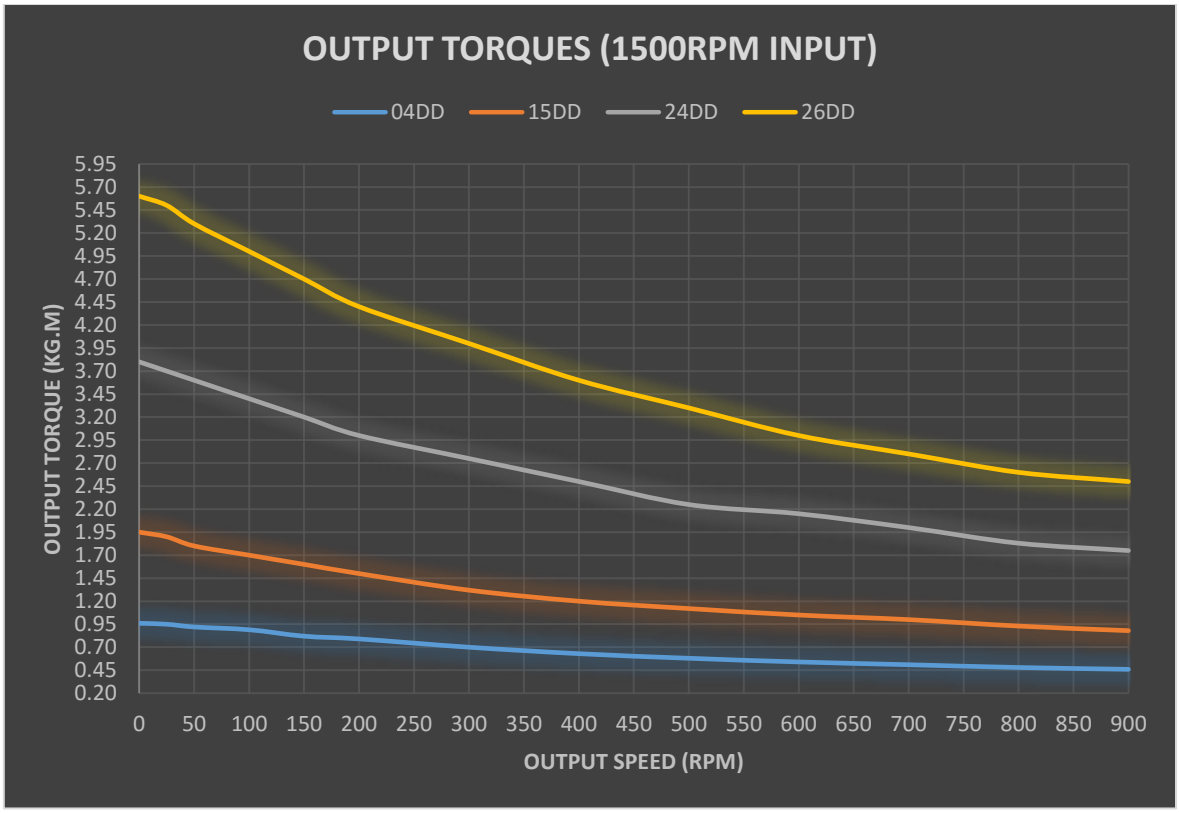

MOTORISED FOOT MOUNTING DIFFERENTIAL UNIT ADD-B5/A TYPE

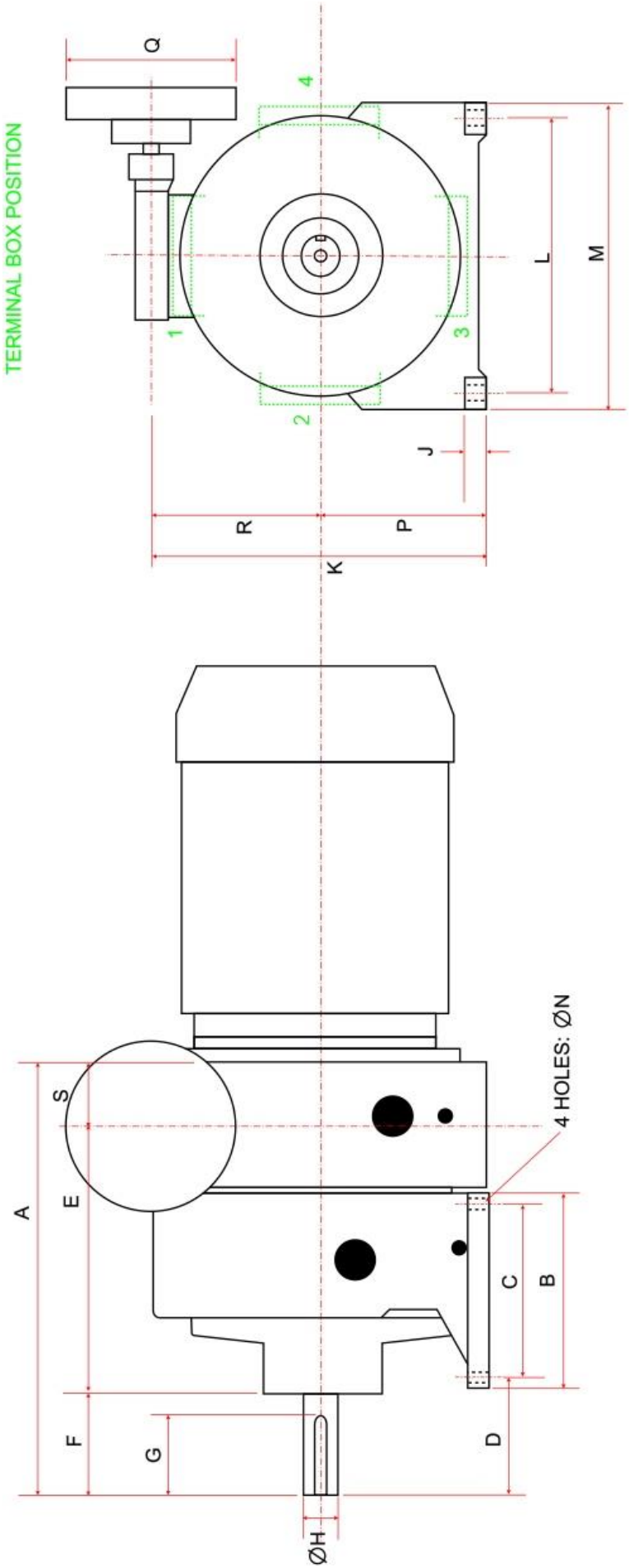

DISCO UNIT	A	B	C	D	E	F	G	H	SHAFT KEY	J	K	L	M	N	P	Q	R	S
DD 04	299	153	120	62	201	40	32	19j6	6 x 6	15	210	170	205	14	110	96	100	58
DD 15	387	176	140	107	253	60	45	28j6	8 x 7	20	250	200	240	14	130	96	120	74
DD 24	376	252	220	187	234	60	50	28j6	8 x 7	23	298	255	290	14	150	96	148	82
DD 26	376	252	220	187	234	60	50	28j6	8 x 7	23	298	255	290	14	150	96	148	82

MOTORISED FLANGE MOUNTING DIFFERENTIAL UNIT FDD-B5/A TYPE

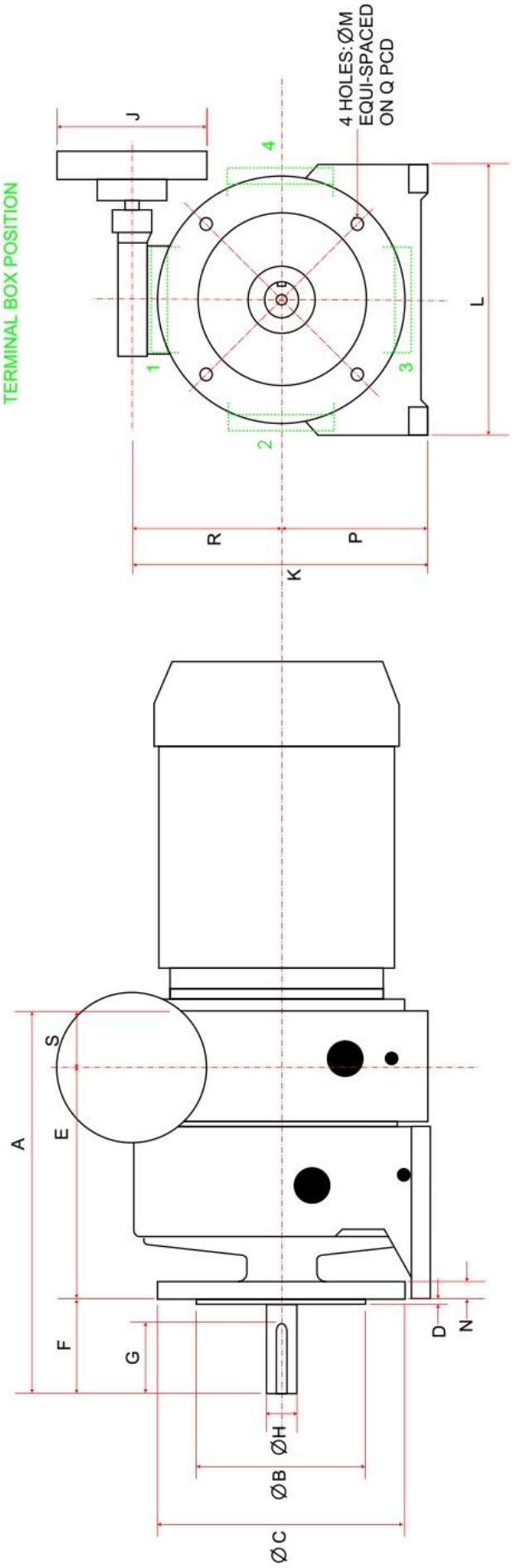

DISCO UNIT	A	B	C	D	E	F	G	H	SHAFT KEY	J	K	L	M	N	P	Q	R	S
DD 04	299	130	200	3.5	201	40	32	19j6	6 x 6	96	210	205	12	12	110	165	100	58
DD 15	387	180	250	4	253	60	45	28j6	8 x 7	96	250	240	14	16	130	215	120	74
DD 24	376	180	250	4	234	60	50	28j6	8 x 7	96	298	290	14	16	150	215	148	82
DD 26	376	180	250	4	234	60	50	28j6	8 x 7	96	298	290	14	16	150	215	148	82

NON-MOTORISED FOOT MOUNTING DIFFERENTIAL UNIT ADD TYPE

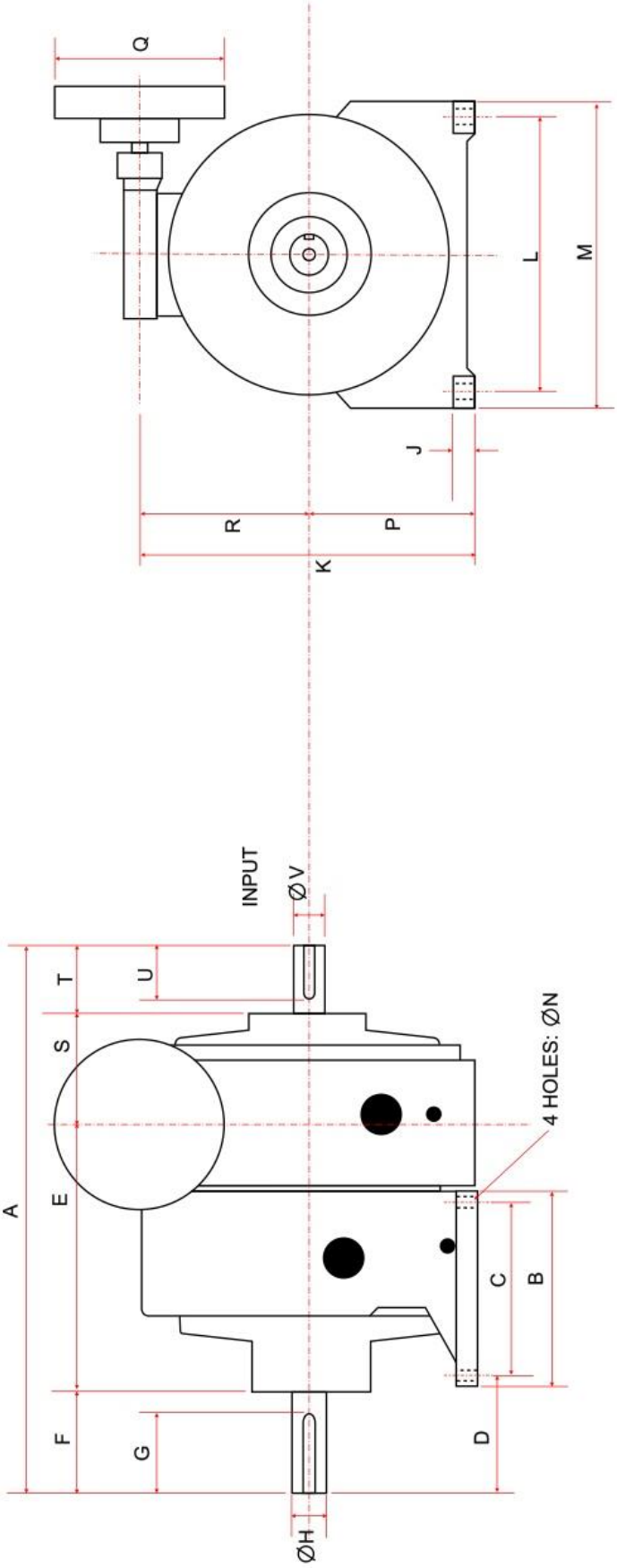

DISCO UNIT	A	B	C	D	E	F	OUTPUT G	OUTPUT H	OUTPUT SHAFT KEY	J	K	L	M	N	P	Q	R	S	T	INPUT U	INPUT V	INPUT SHAFT KEY
DD 04	352	153	120	62	201	40	32	19j6	6 x 6	15	210	170	205	14	110	96	100	81	30	25	15j6	5 x 5
DD 15	460	176	140	107	253	60	45	28j6	8 x 7	20	250	200	240	14	130	96	120	107	40	32	20j6	6 x 6
DD 24	475	252	220	187	234	60	50	28j6	8 x 7	23	298	255	290	14	150	96	148	132	50	40	25j6	8 x 7
DD 26	475	252	220	187	234	60	50	28j6	8 x 7	23	298	255	290	14	150	96	148	132	50	40	25j6	8 x 7

NON-MOTORISED FLANGE MOUNTING DIFFERENTIAL UNIT FDD TYPE

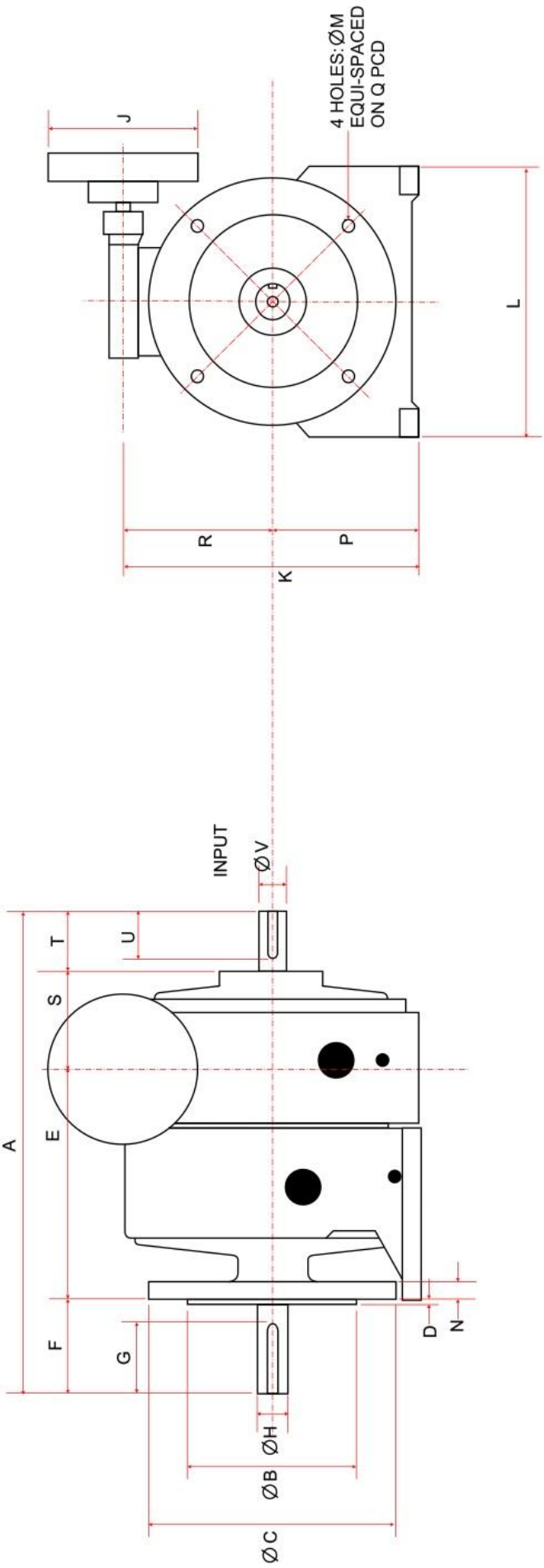

DISCO UNIT	A	B	C	D	E	F	OUTPUT G	OUTPUT H	OUTPUT SHAFT KEY	J	K	L	M	N	P	Q	R	S	T	INPUT U	INPUT V	INPUT SHAFT KEY
DD 04	352	130	200	3.5	201	40	32	19j6	6 x 6	15	210	205	12	12	110	165	100	58	30	25	15j6	5 x 5
DD 15	460	180	250	4	253	60	45	28j6	8 x 7	20	250	240	14	16	130	215	120	74	40	32	20j6	6 x 6
DD 24	475	180	250	4	234	60	50	28j6	8 x 7	23	298	290	14	16	150	215	148	82	50	40	25j6	8 x 7
DD 26	475	180	250	4	234	60	50	28j6	8 x 7	23	298	290	14	16	150	215	148	82	50	40	25j6	8 x 7

6. PARTS CATALOGUES

THE PICTURES USED ARE GENERIC REPRESENTATIONS

THEY ARE SUITABLE FOR PARTS IDENTIFICATION

FOR REFERENCE ONLY

ESR50-45 BREAKDOWN

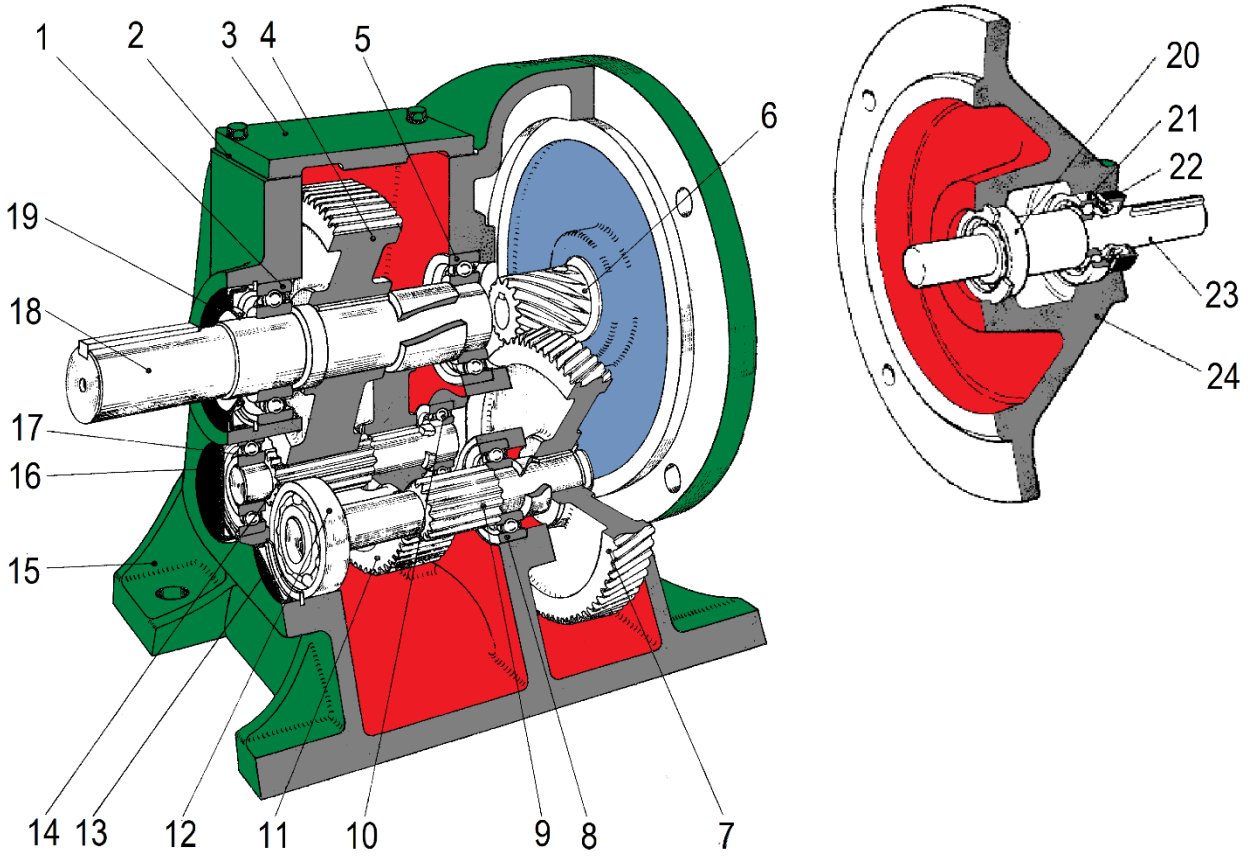

1. **OUTER OUTPUT BEARING**
2. **TOP COVER PLATE GASKET**
3. **TOP COVER PLATE**
4. **OUTPUT GEAR**
5. **INNER OUTPUT BEARING**
6. **MOTOR PINION**
7. **FIRST GEAR**
8. **INTERMEDIATE BEARING**
9. **SECOND PINION SHAFT**
10. **INTERMEDIATE BEARING (TRIPLE REDUCTION ONLY)**
11. **SECOND GEAR (TRIPLE REDUCTION ONLY)**
12. **INTERMEDIATE BEARING**
13. **ENDCAP**
14. **SECOND PINION SHAFT (TRIPLE REDUCTION ONLY)**
15. **GEAR CASE (FOOT MOUNTED SHOWN)**
16. **ENDCAP**
17. **INTERMEDIATE BEARING (TRIPLE REDUCTION ONLY)**
18. **OUTPUT SHAFT**
19. **OUTPUT OIL SEAL**
20. **INNER INPUT BEARING**
21. **OUTER INPUT BEARING**
22. **INPUT OIL SEAL**
23. **INPUT SHAFT**
24. **INPUT HOUSING**

ESR50

DESCRIPTION	*PART NUMBER*		
GEAR CASE FOOT	50	M	105
GEAR CASE FLANGE	50	M	104
ABUTMENT PLATE	50	M	241
MOTOR PINION	50	M	141
FIRST GEAR	50	M	151
SECOND PINION SHAFT (DOUBLE REDUCTION)	50	M	163
SECOND PINION SHAFT (TRIPLE REDUCTION)	50	M	171
SECOND GEAR	50	M	181
THIRD PINION SHAFT	50	M	201
OUTPUT GEAR	50	M	211
OUTPUT GEAR 57T	50	M	212
OUTPUT SHAFT FOOT	50	M	131
OUTPUT SHAFT FLANGE	50	M	132
LAY SHAFT	50	M	221
2ND PINION SHAFT SPACER	50	M	251
3RD PINION SHAFT SPACER	50	M	252
OUTPUT BEARING INNER			131514
OUTPUT BEARING OUTER			131516
OUTPUT OIL SEAL			135205
INPUT FLANGE	50	M	502
INPUT SHAFT	50	M	511
INPUT SHAFT BEARINGS			131502
INPUT SHAFT OIL SEAL			135203

DESCRIPTION	*PART NUMBER*		
GEAR CASE F00T	00	M	101
GEAR CASE FLANGE	00	M	102
BEARING GLACIER			166659
BUSH OIL RETAINING 12*8*8			166660
BUSH OIL RETAINING 12*8*12			166661
OUTPUT SHAFT	00	M	131
OUTPUT OIL SEAL			135217
LAY SHAFT	00	M	221
OUTPUT BEARING INNER			131549
OUTPUT BEARING OUTER			131550
2ND PINION (DOUBLE REDUCTION)	00	M	172
2ND PINION (TRIPLE REDUCTION)	00	M	171
CLUSTER GEAR	00	M	201
OUTPUT GEAR	00	M	211
MOTOR PINION	00	M	141
FIRST GEAR	00	M	151
INPUT FLANGE	1	M	502
INPUT SHAFT	1	M	512
INPUT SHAFT BEARINGS			131519
INPUT SHAFT OIL SEAL			135207

ESR1

DESCRIPTION	*PART NUMBER*		
GEAR CASE FOOT	1	M	105
GEAR CASE FLANGE	1	M	104
OIL SEAL HOUSING AND FRONT PLATE	1	M	112
TOP COVER PLATE	1	M	121
MOTOR PINION	1	M	143
FIRST GEAR	1	M	153
SECOND PINION AND SHAFT (DOUBLE REDUCTION)	1	M	163
SECOND PINION AND SHAFT (TRIPLE REDUCTION)	1	M	161
SECOND GEAR	1	M	181
LOOSE SECOND PINION	1	M	171
LOOSE SECOND PINION SHAFT	1	M	221
THIRD PINION AND SHAFT	1	M	191
OUTPUT GEAR	1	M	211
OUTPUT SHAFT STD	1	M	133
OUTPUT SHAFT HEAVY BEARING	1	M	131
OUTPUT BEARING SPACER	1	M	254
OUTPUT GEAR SPACER	1	M	256
FIRST GEAR SPACER	1	M	251
SECOND GEAR SPACER	1	M	252
INTERMEDIATE SHAFT CIRCLIP (AK17)			132262
TOP COVER GASKET	1	M	261
OUTPUT BEARING			131520
INTERMEDIATE BEARING			131514
HEAVY DUTY OUTPUT BEARING			131803
OIL SEAL FOOT			135298
OIL SEAL FLANGE			135212
END COVER			166309
INPUT FLANGE	1	M	502
INPUT SHAFT	1	M	512
INPUT SHAFT BEARINGS			131519
INPUT SHAFT OIL SEAL			135207

DESCRIPTION	*PART NUMBER*		
GEAR CASE FOOT	2	M	105
GEAR CASE FLANGE	2	M	104
OIL SEAL HOUSING AND FRONT PLATE	2	M	111
TOP COVER PLATE	2	M	121
MOTOR PINION	2	M	144
FIRST GEAR	2	M	153
SECOND PINION AND SHAFT (DOUBLE REDUCTION)	2	M	163
SECOND PINION AND SHAFT (TRIPLE REDUCTION)	2	M	161
SECOND GEAR	2	M	181
LOOSE SECOND PINION	2	M	171
LOOSE SECOND PINION SHAFT	2	M	221
THIRD PINION AND SHAFT	2	M	191
OUTPUT GEAR	2	M	211
OUTPUT SHAFT STD	2	M	133
OUTPUT SHAFT HEAVY BEARING	2	M	131
OUTPUT BEARING SPACER	2	M	254
OUTPUT GEAR SPACER	2	M	256
FIRST GEAR SPACER	2	M	251
SECOND GEAR SPACER	2	M	252
INTERMEDIATE SHAFT CIRCLIP (AK20)			132264
TOP COVER GASKET	2	M	261
OUTPUT BEARING			131525
INTERMEDIATE BEARING			131518
HEAVY DUTY OUTPUT BEARING			131804
OIL SEAL FOOT			135299
OIL SEAL FLANGE			135217
END COVER			166310
INPUT FLANGE	33	M	501
INPUT SHAFT	2	M	511
INPUT SHAFT BEARINGS			131522
INPUT SHAFT OIL SEAL			135210

ESR3

DESCRIPTION	*PART NUMBER*		
GEAR CASE FOOT D100/112	3	M	107
GEAR CASE FOOT D132	3	M	109
GEAR CASE FLANGE D100/D112	3	M	104
GEAR CASE FLANGE D132	3	M	106
TOP COVER PLATE	3	M	121
MOTOR PINION	3	M	143
FIRST GEAR	3	M	153
SECOND PINION SHAFT (DOUBLE REDUCTION)	3	M	163
SECOND PINION SHAFT (TRIPLE REDUCTION)	3	M	162
SECOND GEAR	3	M	182
LOOSE SECOND PINION	3	M	171
LOOSE SECOND PINION SHAFT	3	M	221
THIRD PINION AND SHAFT	3	M	191
OUTPUT GEAR	3	M	211
OUTPUT SHAFT STD	3	M	133
OUTPUT SHAFT HEAVY BEARING	3	M	131
OUTPUT BEARING SPACER	3	M	254
OUTPUT GEAR SPACER	3	M	256
FIRST GEAR SPACER	3	M	251
SECOND GEAR SPACER	3	M	252
INTERMEDIATE SHAFT CIRCLIP			132262
TOP COVER GASKET	3	M	261
OUTPUT BEARING			131520
INTERMEDIATE BEARING			131525
INTERMEDIATE BEARING			131514
HEAVY DUTY OUTPUT BEARING			131803
OIL SEAL FOOT			135300
OIL SEAL FLANGE			135221
END COVER			166311
INPUT FLANGE	44	M	501
INPUT SHAFT	3	M	512
INPUT SHAFT BEARINGS			131524
INPUT SHAFT OIL SEAL			135215

ESR35

DESCRIPTION	*PART NUMBER*		
GEAR CASE FOOT D132	35	M	103
GEAR CASE FOOT D160/D180	35	M	105
GEAR CASE FLANGE D132	35	M	104
GEAR CASE FLANGE D160/180	35	M	106
TOP COVER PLATE	35	M	121
TOP COVER PLATE (V1 & V5 ONLY)	35	M	122
MOTOR PINION	35	M	141
FIRST GEAR	35	M	151
SECOND PINION SHAFT (DOUBLE REDUCTION)	35	M	163
SECOND PINION SHAFT (TRIPLE REDUCTION)	35	M	161
SECOND GEAR	35	M	181
THIRD PINION AND SHAFT	35	M	191
LOOSE SECOND PINION	35	M	171
LOOSE SECOND PINION SHAFT	35	M	221
OUTPUT GEAR	35	M	211
OUTPUT SHAFT HEAVY BEARING STD	35	M	133
OUTER OUTPUT BEARING SPACER FLANGE	35	M	255
OUTER OUTPUT BEARING SPACER FOOT	35	M	254
INNER OUTPUT BEARING SPACER (DOUBLE REDUCTION)	35	M	257
INNER OUTPUT BEARING SPACER (TRIPLE REDUCTION)	35	M	253
FIRST GEAR SPACER	35	M	251
SECOND GEAR SPACER	35	M	252
TOP COVER GASKET	35	M	261
OUTPUT BEARING			131531
OUTPUT BEARING			131807
INTERMEDIATE BEARING			131526
OIL SEAL			135228
END COVER			166321
INPUT FLANGE	35	M	501
INPUT SHAFT	35	M	511
INPUT SHAFT BEARINGS (FLANGE)			131529
INPUT SHAFT BEARINGS (FOOT)			131528
INPUT SHAFT OIL SEAL			135220

ESR4

DESCRIPTION	*PART NUMBER*		
GEAR CASE FOOT	4	M	103
GEAR CASE FLANGE	4	M	104
OIL SEAL HOUSING AND FACE PLATE	4	M	111
ABUTMENT PLATE	4	M	241
TOP COVER PLATE (FOOT)	4	M	121
TOP COVER PLATE (FLANGE)	4	M	122
MOTOR PINION	4	M	141
FIRST GEAR	4	M	151
SECOND PINION SHAFT (DOUBLE REDUCTION)	4	M	163
SECOND PINION SHAFT (TRIPLE REDUCTION)	4	M	161
SECOND GEAR	4	M	181
LOOSE SECOND PINION	4	M	171
LOOSE SECOND PINION SHAFT	4	M	221
THIRD PINION AND SHAFT	4	M	191
OUTPUT GEAR	4	M	211
OUTPUT SHAFT HEAVY BEARING STD	4	M	133
OUTER OUTPUT BEARING SPACER FLANGE	4	M	255
OUTER OUTPUT BEARING SPACER FOOT	4	M	254
INNER OUTPUT BEARING SPACER (DOUBLE REDUCTION)	4	M	257
INNER OUTPUT BEARING SPACER (TRIPLE REDUCTION)	4	M	253
FIRST GEAR SPACER	4	M	251
TOP COVER GASKET	4	M	261
INNER OUTPUT BEARING			131535
OUTER OUTPUT BEARING			131808
INTERMEDIATE BEARING			131528
OIL SEAL			135234
INPUT FLANGE	4	M	501
INPUT SHAFT	4	M	511
INPUT SHAFT BEARINGS (FLANGE)			131634
INPUT SHAFT BEARINGS (FOOT)			131533
INPUT SHAFT OIL SEAL			135225

DESCRIPTION	*PART NUMBER*
GEAR CASE FOOT	4 MSS 105
GEAR CASE FLANGE	4 MSS 106
OIL SEAL HOUSING	4 MSS 112
END PLATE	4 MSS 113
TOP COVER PLATE (FOOT)	4 M 121
TOP COVER PLATE (FLANGE)	4 M 122
OIL SEAL HOUSING AND FACE PLATE	4 MSS 111
MOTOR PINION (TRIPLE REDUCTION)	4 M 141
MOTOR PINION (DOUBLE REDUCTION)	4 M 142
FIRST GEAR (TRIPLE REDUCTION)	4 M 151
FIRST GEAR (DOUBLE REDUCTION)	4 M 152
SECOND PINION AND SHAFT RATIOS 82.75:1/72:1	4 MSS 161
SECOND PINION AND SHAFT RATIOS 66.1:1/13.75:1	4 MSS 162
SECOND PINION AND SHAFT RATIOS 7.75:1/4.78:1	4 MSS 164
SECOND PINION AND SHAFT RATIOS 12.16:1/8.77:1	4 MSS 163
SECOND GEAR RATIOS 82.75:1/72.1:1	4 MSS 181
SECOND GEAR RATIOS 66.1:1/13.75:1	4 MSS 182
LOOSE SECOND PINION (DOUBLE REDUCTION)	4 MSS 171
LOOSE SECOND PINION SHAFT (DOUBLE REDUCTION)	4 MSS 221
LOOSE SECOND PINION SPACER (DOUBLE REDUCTION)	4 MSS 256
LOOSE THIRD PINION (TRIPLE REDUCTION)	4 MSS 171
LOOSE THIRD PINION SHAFT (TRIPLE REDUCTION)	4 MSS 231
THIRD PINION AND SHAFT RATIOS 66:1/22.6:1	4 MSS 191
THIRD PINION AND SHAFT RATIOS 82.79:1/72:1	4 MSS 192
OUTPUT GEAR RATIOS 66.1:1/13.75:1 (TRIPLE REDUCTION)	4 MSS 212
OUTPUT GEAR RATIOS 7.79:1/2.31:1 (DOUBLE REDUCTION)	4 MSS 212
OUTPUT GEAR RATIOS 82.75:1/72:1 (TRIPLE REDUCTION)	4 MSS 211
OUTPUT GEAR RATIOS 12.16:/8.77:1 (DOUBLE REDUCTION)	4 MSS 211
OUTPUT SHAFT HEAVY BEARING STD	4 MSS 131
ABUTMENT PLATE	4 MSS 241
OUTER OUTPUT BEARING SPACER FLANGE	4 MSS 255
OUTER OUTPUT BEARING SPACER FOOT	4 MSS 254
INNER OUTPUT BEARING SPACER (TRIPLE REDUCTION)	4 MSS 253
FIRST GEAR SPACER	4 MSS 251
TOP COVER GASKET	4 M 261
INNER OUTPUT BEARING	131191
INNER OUTPUT BEARING	131535
OUTER OUTPUT BEARING	131809
OUTER OUTPUT BEARING	131808
INTERMEDIATE BEARING	131560
INTERMEDIATE BEARING	131528
INTERMEDIATE BEARING (TRIPLE REDUCTION)	131701
OIL SEAL	135234

INPUT FLANGE	4	M	501
INPUT SHAFT	4	M	511
INPUT SHAFT BEARINGS (FLANGE)			131634
INPUT SHAFT BEARINGS (FOOT)			131533
INPUT SHAFT OIL SEAL			135225

DESCRIPTION	*PART NUMBER*		
GEAR CASE FOOT	425	M	103
GEAR CASE FLANGE	425	M	102
TOP COVER PLATE (FOOT)	425	M	121
TOP COVER PLATE (FLANGE)	425	M	122
OIL SEAL HOUSING AND FACE PLATE	425	M	111
MOTOR PINION	425	M	141
FIRST GEAR	425	M	151
SECOND PINION AND SHAFT (TRIPLE REDUCTION)	425	M	164
SECOND PINION AND SHAFT (DOUBLE REDUCTION)	425	M	165
SECOND GEAR	425	M	182
LOOSE SECOND PINION (DOUBLE REDUCTION)	425	M	171
LOOSE SECOND PINION SHAFT (DOUBLE REDUCTION)	425	M	221
LOOSE SECOND PINION SPACER (DOUBLE REDUCTION)	425	M	256
THIRD PINION AND SHAFT	425	M	192
OUTPUT GEAR	425	M	212
OUTPUT SHAFT HEAVY BEARING STD	425	M	131
ABUTMENT PLATE (FOOT)	425	M	241
ABUTMENT PLATE (FLANGE)	425	M	242
OUTER OUTPUT BEARING SPACER FLANGE	425	M	255
OUTER OUTPUT BEARING SPACER FOOT	425	M	254
INNER OUTPUT BEARING SPACER	425	M	253
SECOND PINION SHAFT SPACER (DOUBLE REDUCTION)	425	M	257
SECOND PINION SHAFT SPACER (TRIPLE REDUCTION)	425	M	252
FIRST GEAR SPACER	425	M	251
TOP COVER GASKET	425	M	261
INNER OUTPUT BEARING			131540
OUTER OUTPUT BEARING			131810
INTERMEDIATE BEARING			131563
OIL SEAL			135234
INPUT FLANGE	425	M	501
INPUT SHAFT	425	M	511
ABUTMENT PLATE	425	M	521
INPUT SHAFT BEARINGS (FLANGE)			131538
INPUT SHAFT BEARINGS (FOOT)			131537
INPUT SHAFT OIL SEAL			135232

ESR45

DESCRIPTION	*PART NUMBER*		
GEAR CASE FOOT	45	M	101
GEAR CASE FLANGE	45	M	102
TOP COVER PLATE (FOOT)	45	M	121
TOP COVER PLATE (FLANGE)	45	M	122
OIL SEAL HOUSING AND FACE PLATE	45	M	111
MOTOR PINION	45	M	141
MOTOR PINION	45	M	142
FIRST GEAR	45	M	151
FIRST GEAR	45	M	152
SECOND PINION AND SHAFT (TRIPLE REDUCTION)	45	M	164
SECOND PINION AND SHAFT (DOUBLE REDUCTION)	45	M	165
SECOND GEAR	45	M	182
LOOSE SECOND PINION (DOUBLE REDUCTION)	45	M	171
LOOSE SECOND PINION SHAFT (DOUBLE REDUCTION)	45	M	222
LOOSE SECOND PINION SPACER (DOUBLE REDUCTION)	45	M	256
THIRD PINION AND SHAFT	45	M	192
OUTPUT GEAR	45	M	212
OUTPUT SHAFT HEAVY BEARING STD	45	M	131
ABUTMENT PLATE (FOOT)	45	M	241
ABUTMENT PLATE (FLANGE)	45	M	242
OUTER OUTPUT BEARING SPACER FOOT	45	M	254
OUTER OUTPUT BEARING SPACER FLANGE	45	M	255
INNER OUTPUT BEARING SPACER	45	M	253
FIRST GEAR SPACER	45	M	251
SECOND PINION SHAFT SPACER	45	M	257
SECOND GEAR SPACER (DOUBLE REDUCTION)	45	M	252
TOP COVER GASKET	45	M	261
INNER OUTPUT BEARING			131543
OUTER OUTPUT BEARING			131811
INTERMEDIATE BEARING			131565
OIL SEAL			135239
INPUT FLANGE	45	M	501
INPUT SHAFT	45	M	511
ABUTMENT PLATE	45	M	521
INPUT SHAFT BEARINGS (FLANGE)			131541
INPUT SHAFT BEARINGS (FOOT)			131540
INPUT SHAFT OIL SEAL			135235

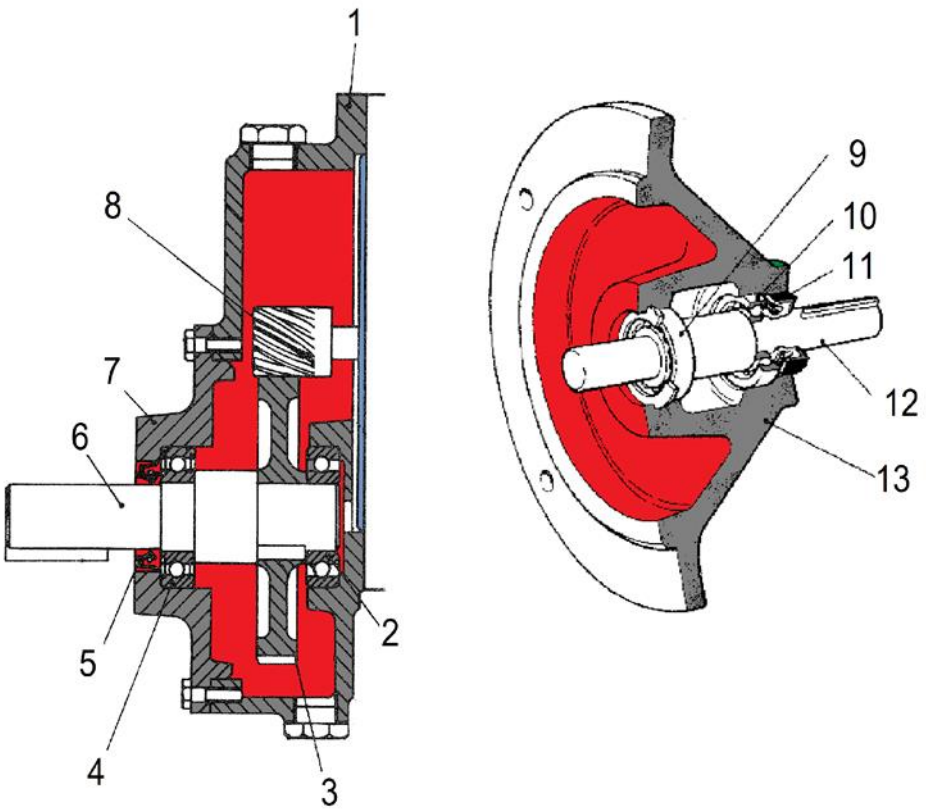

1. **GEAR CASE**
2. **INNER OUTPUT BEARING**
3. **OUTPUT GEAR**
4. **OUTER OUTPUT GEAR**
5. **OUTPUT OIL SEAL**
6. **OUTPUT/INPUT SHAFT**
7. **OUTPUT HOUSING (FEET ON MOTOR SHOWN)**
8. **MOTOR PINION**
9. **INNER OUTPUT BEARING**
10. **OUTER OUTPUT BEARING**
11. **INPUT OIL SEAL**
12. **INPUT SHAFT**
13. **INPUT HOUSING**

ESR6

DESCRIPTION	*PART NUMBER*
GEAR CASE	6 M 103
MOUNTING FLANGE	6 M 112
ENDPLATE AND BEARING HOUSING	6 M 111
MOTOR PINION	1 M 143
FIRST GEAR	1 M 153
OUTPUT SHAFT	6 M 131
OIL SEAL	135209
BEARING INNER OUTPUT SHAFT	131514
BEARING OUTER OUTPUT SHAFT	131550
INPUT FLANGE	1 M 502
INPUT SHAFT	1 M 512
INPUT SHAFT BEARINGS	131519
INPUT SHAFT OIL SEAL	135207

ESR7

DESCRIPTION	*PART NUMBER*
GEAR CASE	7 M 102
GEAR CASE A250 FLANGE	7 M 103
GEAR CASE A200 FLANGE	7 M 104
MOUNTING FLANGE	7 M 114
ENDPLATE AND BEARING HOUSING	7 M 111
MOTOR PINION	2 M 144
FIRST GEAR	7 M 153
OUTPUT SHAFT	7 M 131
OIL SEAL	135215
BEARING INNER OUTPUT SHAFT	131525
BEARING OUTER OUTPUT SHAFT	131524
INPUT FLANGE	33 M 501
INPUT SHAFT	2 M 511
INPUT SHAFT BEARINGS	131522
INPUT SHAFT OIL SEAL	135210

DESCRIPTION	*PART NUMBER*
GEAR CASE	8 M 101
MOUNTING FLANGE	8 M 112
ENDPLATE AND BEARING HOUSING	8 M 111
MOTOR PINION	3 M 144
FIRST GEAR	8 M 153
OUTPUT SHAFT	8 M 131
OIL SEAL	135220
BEARING INNER OUTPUT SHAFT	131528
BEARING OUTER OUTPUT SHAFT	131558
INPUT FLANGE	44 M 501
INPUT SHAFT	3 M 512
INPUT SHAFT BEARINGS	131524
INPUT SHAFT OIL SEAL	135215

ESR9-11 BREAKDOWN

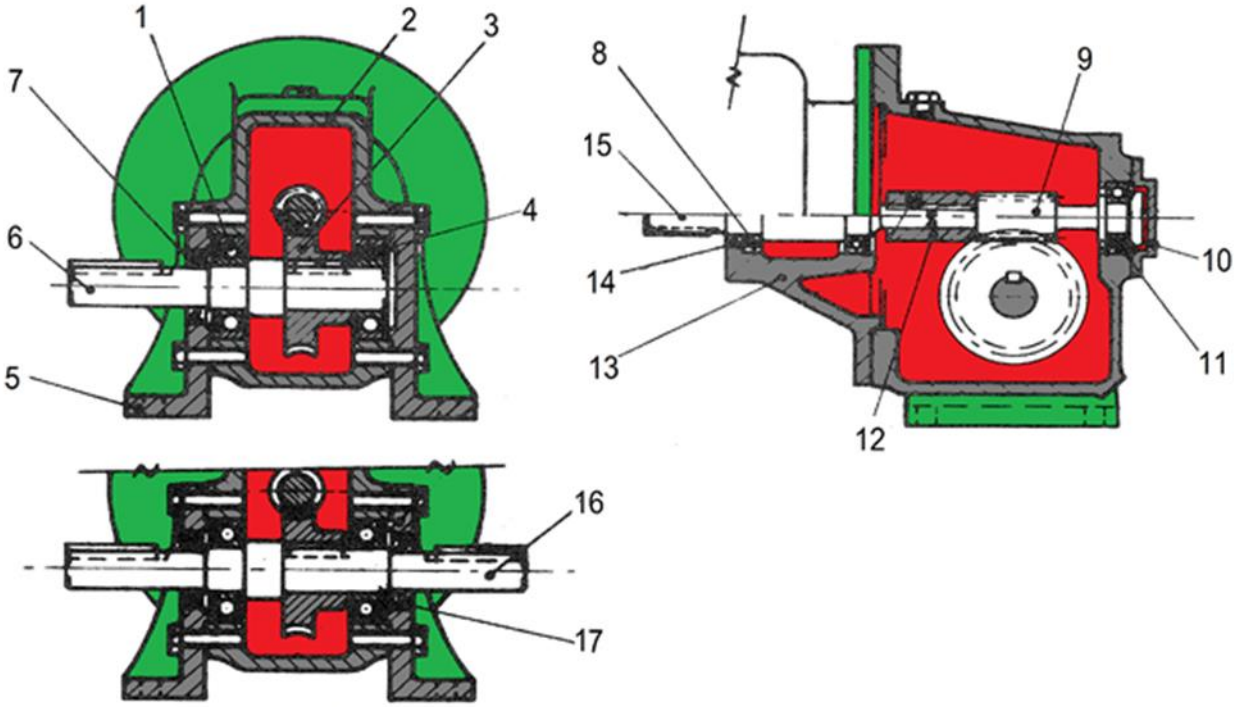

ARRANGEMENT OF UNIT WITH DOUBLE EXTENSION OUTPUT SHAFT

1. **OUTPUT SHAFT BEARING**
2. **GEAR CASE**
3. **WORM WHEEL**
4. **OUTPUT BEARING**
5. **FEET (FOOT MOUNTING SHOWN)**
6. **OUTPUT SHAFT (FOOT MOUNTING)**
7. **OUTPUT OIL SEAL**
8. **OUTER INPUT BEARING**
9. **WORM SHAFT**
10. **WORM SHAFT ENDCAP**
11. **WORM SHAFT BEARING**
12. **MOTOR COUPLING**
13. **INPUT CASING**
14. **INPUT OIL SEAL**
15. **INPUT SHAFT**
16. **OUT PUT SHAFT DOUBLE EXTENSION (FOOT MOUNTING)**
17. **OUTPUT OIL SEAL**

DESCRIPTION	*PART NUMBER*
GEAR CASE FOOT	9 M 103
GEAR CASE FLANGE	9 M 102
FOOT AND ENDCAP	9 M 402
FOOT AND OIL SEAL HOUSING	9 M 401
OUTPUT SHAFT ENDCAP	9 M 392
OIL SEAL HOUSING AND ENDCAP	9 M 391
ROUND MOUNTING FLANGE	9 M 411
OUTPUT SHAFT FOOT SINGLE EXTENSION	9 M 131
OUTPUT SHAFT FOOT DOUBLE EXTENSION	9 M 132
OUTPUT SHAFT FLANGE SINGLE EXTENSION	9 M 133
OUTPUT SHAFT FLANGE DOUBLE EXTENSION	9 M 134
WORM SHAFT	9 M 362
WORM WHEEL	9 M 372
WORM SHAFT ENDCAP	9 M 351
WORM SHAFT COUPLING	9 M 385/6
OUTPUT SHAFT BEARING	131516
WORM SHAFT BEARING	131501
OUTPUT SHAFT OIL SEAL	135204
INPUT FLANGE	50 M 502
INPUT SHAFT	9 M 511
INPUT SHAFT BEARINGS	131502
INPUT SHAFT OIL SEAL	135203

ESR10

DESCRIPTION	*PART NUMBER*
GEAR CASE	10 M 103
FOOT AND ENDCAP	10 M 402
FOOT AND OIL SEAL HOUSING	10 M 401
OUTPUT SHAFT ENDCAP	10 M 392
OIL SEAL HOUSING AND ENDCAP	10 M 391
ROUND MOUNTING FLANGE	10 M 411
OUTPUT SHAFT FOOT SINGLE EXTENSION	10 M 131
OUTPUT SHAFT FOOT DOUBLE EXTENSION	10 M 132
OUTPUT SHAFT FLANGE SINGLE EXTENSION	10 M 133
OUTPUT SHAFT FLANGE DOUBLE EXTENSION	10 M 134
WORM SHAFT	10 M 362
WORM WHEEL	10 M 372
WORM SHAFT ENDCAP	10 M 351
WORM SHAFT COUPLING	10 M 385/6/7
OUTPUT SHAFT BEARING	131519
WORM SHAFT BEARING 6	131547
OUTPUT SHAFT OIL SEAL	135209
INPUT FLANGE	1 M 502
INPUT SHAFT	10 M 512
INPUT SHAFT BEARINGS	131519
INPUT SHAFT OIL SEAL	135207

DESCRIPTION	*PART NUMBER*
GEAR CASE	11 M 103
FOOT AND ENDCAP	11 M 402
FOOT AND OIL SEAL HOUSING	11 M 401
OUTPUT SHAFT ENDCAP	11 M 392
OIL SEAL HOUSING AND ENDCAP	11 M 391
ROUND MOUNTING FLANGE	11 M 411
OUTPUT SHAFT FT SINGLE EXTENSION	11 M 131
OUTPUT SHAFT FT DOUBLE EXTENSION	11 M 132
OUTPUT SHAFT FL SINGLE EXTENSION	11 M 133
OUTPUT SHAFT FL DOUBLE EXTENSION	11 M 134
WORM SHAFT	11 M 362
WORM WHEEL	11 M 372
WORM SHAFT ENDCAP	11 M 351
WORM SHAFT COUPLING	11 M 386/7/8
OUTPUT SHAFT BEARING	131555
WORM SHAFT BEARING	131549
OUTPUT SHAFT OIL SEAL	135215
INPUT FLANGE	33 M 501
INPUT SHAFT	11 M 511
INPUT SHAFT BEARINGS	131522
INPUT SHAFT OIL SEAL	135210

ERA33-44 BREAKDOWN

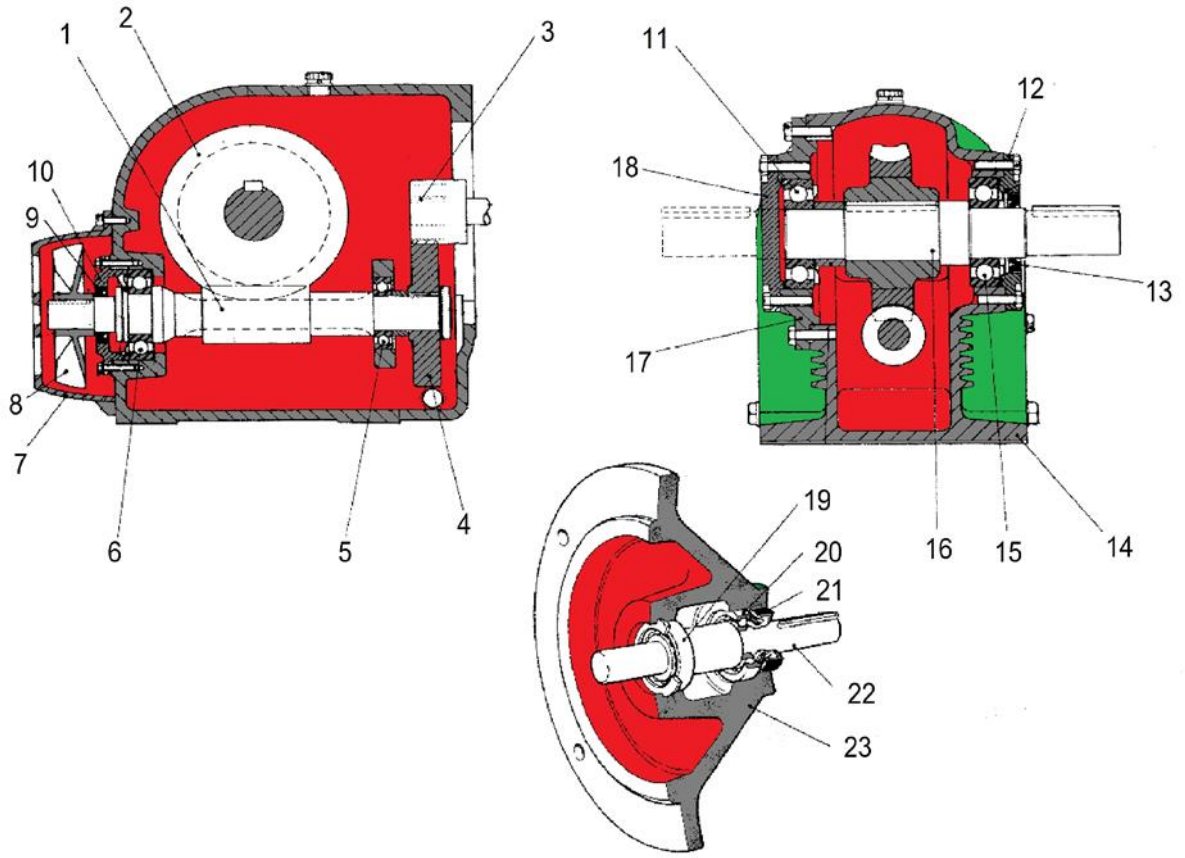

1. **WORM SHAFT**
2. **WORM WHEEL**
3. **MOTOR PINION**
4. **FIRST GEAR**
5. **WORM SHAFT FRONT BEARING**
6. **WORM SHAFT REAR BEARING**
7. **FAN COWL (ERA44 ONLY)**
8. **FAN (ERA44 ONLY)**
9. **WORM SHAFT OIL SEAL (ERA44 ONLY)**
10. **WORM SHAFT ENDCAP**
11. **OUTPUT BEARING**
12. **OIL SEAL HOUSING**
13. **OIL SEAL**
14. **GEAR CASE**
15. **OUTPUT BEARING**
16. **OUTPUT SHAFT**
17. **BEARING HOUSING**
18. **OIL SEAL HOUSING (WITH ENDCAP)**
19. **INNER INPUT BEARING**
20. **OUTER INPUT BEARING**
21. **INPUT OIL SEAL**
22. **INPUT SHAFT**
23. **INPUT HOUSING**

ERA33

DESCRIPTION	*PART NUMBER*
GEAR CASE	33 M 101
MTG. FLG. AND BRG. HOUSING FLANGE	33 M 411
OIL SEAL HOUSING AND END CAP	33 M 391
END CAP - S/EXT OUTPUT SHAFT FLANGE	33 M 392
END CAP - D/EXT OUTPUT SHAFT FLANGE	33 M 394
OUTPUT SHAFT - S/EXT FOOT	33 M 131
OUTPUT SHAFT - D/EXT FOOT	33 M 134
OUTPUT SHAFT - S/EXT LH FLANGE	33 M 133
OUTPUT SHAFT - S/EXT RH FLANGE	33 M 135
OUTPUT SHAFT - D/EXT FLANGE	33 M 134
OUTPUT SHAFT SPACER	33 M 253
HELICAL MOTOR PINION	2 M 144
HELICAL FIRST GEAR	33 M 153
WORM WHEEL	33 M 372
WORM SHAFT	33 M 362
WORM SHAFT OIL SEAL HOUSING AND END CAP	33 M 351
1ST GEAR SPACER	33 M 251
OIL SEAL - OUTPUT SHAFT	135220
OUTPUT SHAFT BEARING	131562
HEAVY DUTY OUTPUT BEARING	131852
INPUT FLANGE	33 M 501
INPUT SHAFT	2 M 511
INPUT SHAFT BEARINGS	131522
INPUT SHAFT OIL SEAL	135210

ERA44

DESCRIPTION	*PART NUMBER*
GEAR CASE	44 M 101
MTG. FLG. AND BRG. HOUSING FLANGE	44 M 411
OIL SEAL HOUSING AND END CAP	44 M 391
END CAP - S/EXT OUTPUT SHAFT FLANGE	44 M 392
END CAP - D/EXT OUTPUT SHAFT FLANGE	44 M 394
OUTPUT SHAFT - S/EXT FOOT	44 M 131
OUTPUT SHAFT - D/EXT FOOT	44 M 134
OUTPUT SHAFT - S/EXT L/H FLANGE	44 M 133
OUTPUT SHAFT - S/EXT R/H FLANGE	44 M 135
OUTPUT SHAFT - D/EXT FLANGE	44 M 134
OUTPUT SHAFT SPACER	44 M 253
HELICAL MOTOR PINION	3 M 143
HELICAL FIRST GEAR	44 M 154
WORM WHEEL	44 M 372
WORM SHAFT	44 M 362
WORM SHAFT OIL SEAL HOUSING AND END CAP	44 M 351
FIRST GEAR SPACER	44 M 251
WORM SHAFT SPACER	44 M 252
FAN	44 M 430
FAN COWL	44 M 431
OIL SEAL - OUTPUT SHAFT	135224
OUTPUT SHAFT BEARING	131562
HEAVY DUTY OUTPUT BEARING	131702
INNER WORM SHAFT BEARING	131526
OUTER WORM SHAFT BEARING	131557
OUTER WORM SHAFT BEARING B5/V6 MTG	131558
OIL SEAL FOR WORM SHAFT	135256
INPUT FLANGE	44 M 501
INPUT SHAFT	3 M 511
INPUT BEARINGS	131524
OIL SEAL - INPUT SHAFT	135215

ECR1-45 BREAKDOWN

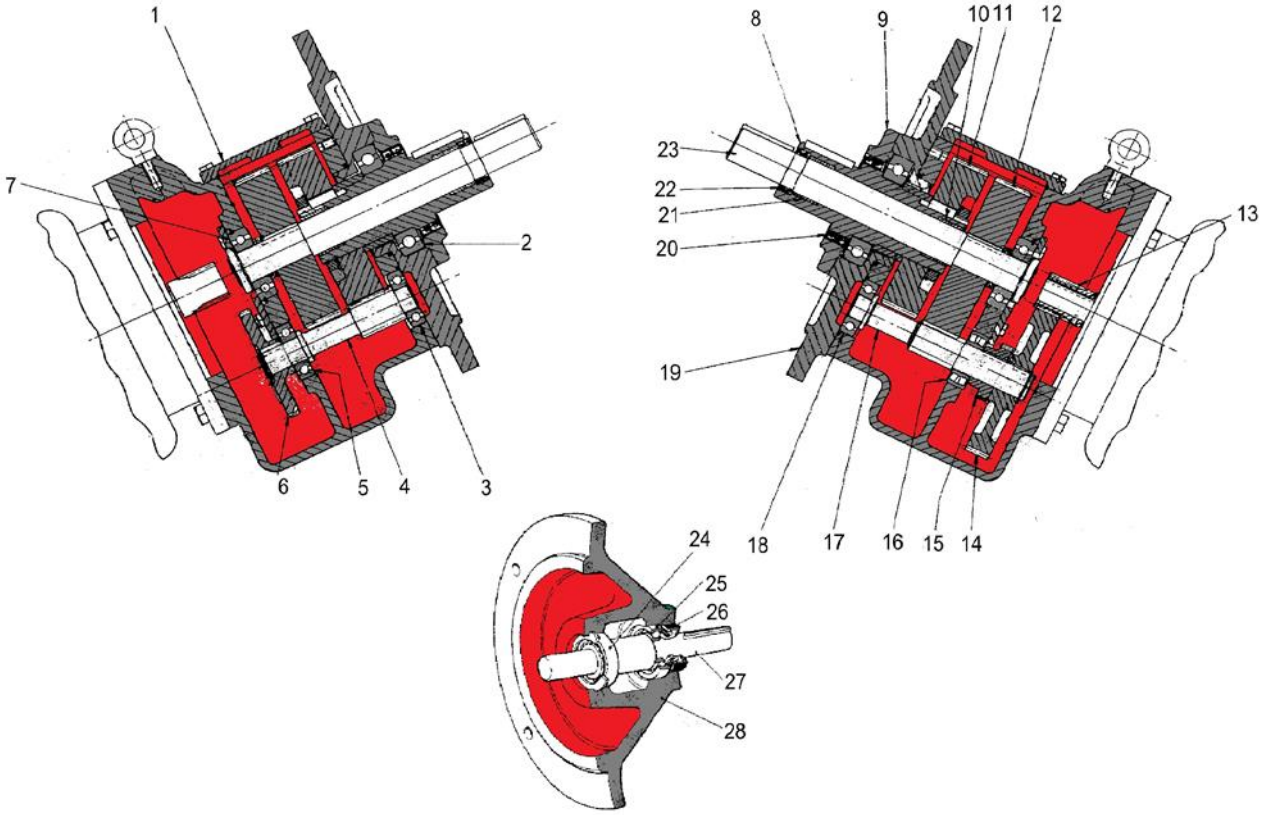

1. **TOP COVER PLATE**
2. **OUTER OUTPUT SHAFT BEARING**
3. **TRANSVERSE PINION SHAFT OUTER BEARING**
4. **TRANSVERSE PINION SHAFT**
5. **TRANSVERSE PINION SHAFT INNER BEARING**
6. **TRANSVERSE FIRST GEAR**
7. **INNER OUTPUT SHAFT BEARING**
8. **OUTER OUTPUT SHAFT**
9. **OIL SEAL HOUSING**
10. **INNER GLACIER BEARING**
11. **OUTER OUTPUT GEAR**
12. **INNER OUTPUT GEAR**
13. **MOTOR PINION**
14. **FIRST GEAR**
15. **TRANSVERSE PINION**
16. **SECOND PINION SHAFT INNER BEARING**
17. **SECOND PINION SHAFT**
18. **SECOND PINION SHAFT OUTER BEARING**
19. **MOUNTING FLANGE (SEPARATE ONLY ON ECR3)**
20. **OUTER OUTPUT SHAFT OIL SEAL**
21. **OUTER GLACIER BEARING**
22. **INNER OUTPUT SHAFT OIL SEAL**
23. **INNER OUTPUT SHAFT**
24. **INNER INPUT BEARING**
25. **OUTER INPUT BEARING**
26. **INPUT OIL SEAL**
27. **INPUT SHAFT**
28. **INPUT HOUSING**

ECR1-45

DESCRIPTION	*PART NO.*						
	ECR1	ECR2	ECR3	ECR35	ECR4	ECR425	ECR45
GEAR CASE	(D71) 1M602	(D80/90) 2M604	(D100/112) 3M606	(D100/112/132) 35M606	PART NUMBERS ON REQUEST	PART NUMBERS ON REQUEST	PART NUMBERS ON REQUEST
GEAR CASE			(D132) 3M608	(D132) 35M604			
ROUND MOUNTING FLANGE/BEARING HOUSING.	1M612	2M612	3M612	166321 (2 OFF BLANKING PLUG)			
TOP COVER PLATE	1M121	2M122	3M122	35M122			
OIL SEAL HOUSING	1M622	2M621	3M622	35M622			
†INNER OUTPUT SHAFT	1M631	2M631	3M632	35M632			
†OUTER OUTPUT SHAFT	1M642	2M642	3M642	35M642			
HELICAL MOTOR PINION	1M143	2M144	3M143	35M141			
HELICAL FIRST GEAR	1M652	2M652	3M153	35M151			
TRANSVERSE PINION	1M661	2M661	3M662	35M662			
TRANSVERSE GEAR	1M671	2M671	3M672	35M672			
2ND PINION SHAFT	1M681	2M681	3M682	35M682 WITH 35M773 SPACER			
INNER OUTPUT GEAR	1M701	2M701	3M701	35M702			
3RD PINION SHAFT	1M691	2M691	3M693	35M692 WITH 35M773 SPACER			
OUTER OUTPUT GEAR	1M711	2M711	3M712	35M712			
ABUTMENT PLATE	1M751	2M751	3M241	35M752			
SPACER- INNER OUTPUT BEARING	1M781	2M781	3M781	35M782			
SPACER- OUTER OUTPUT BEARING	1M772	2M772	3M772	35M772			
TOP COVER GASKET	1M261	2M261	3M261	35M261			
INTERMEDIATE SHAFT BEARING	131516	131518	131551	131526			
INTERMEDIATE SHAFT BEARING	131516	131518	131804	131526			
INNER OUTPUT BEARING	131547	131549	131556	131578			
OUTER OUTPUT BEARING	131506	131531	131536	131540			
*INNER GLACIER BUSH	166667	166668	166669	166670			
INNER OUTPUT SHAFT OIL SEAL	135207	135214	135257	135266			
OUTER OUTPUT SHAFT OIL SEAL	135262	135270	135274	135268			
LOCKNUT- INNER OUTPUT SHAFT	132450	132451	132454	132455			
*OUTER GLACIER BUSH	166667	166668	166679	166670			

†ONLY AVAILABLE AS MATCHED PAIR, NOT SOLD SEPARATELY, AND INCLUDES GLACIER BUSHES.
*MACHINED TO SUIT OUTPUT SHAFTS.

DISCO MECHANICAL VARIABLE SPEED DRIVE BREAKDOWN

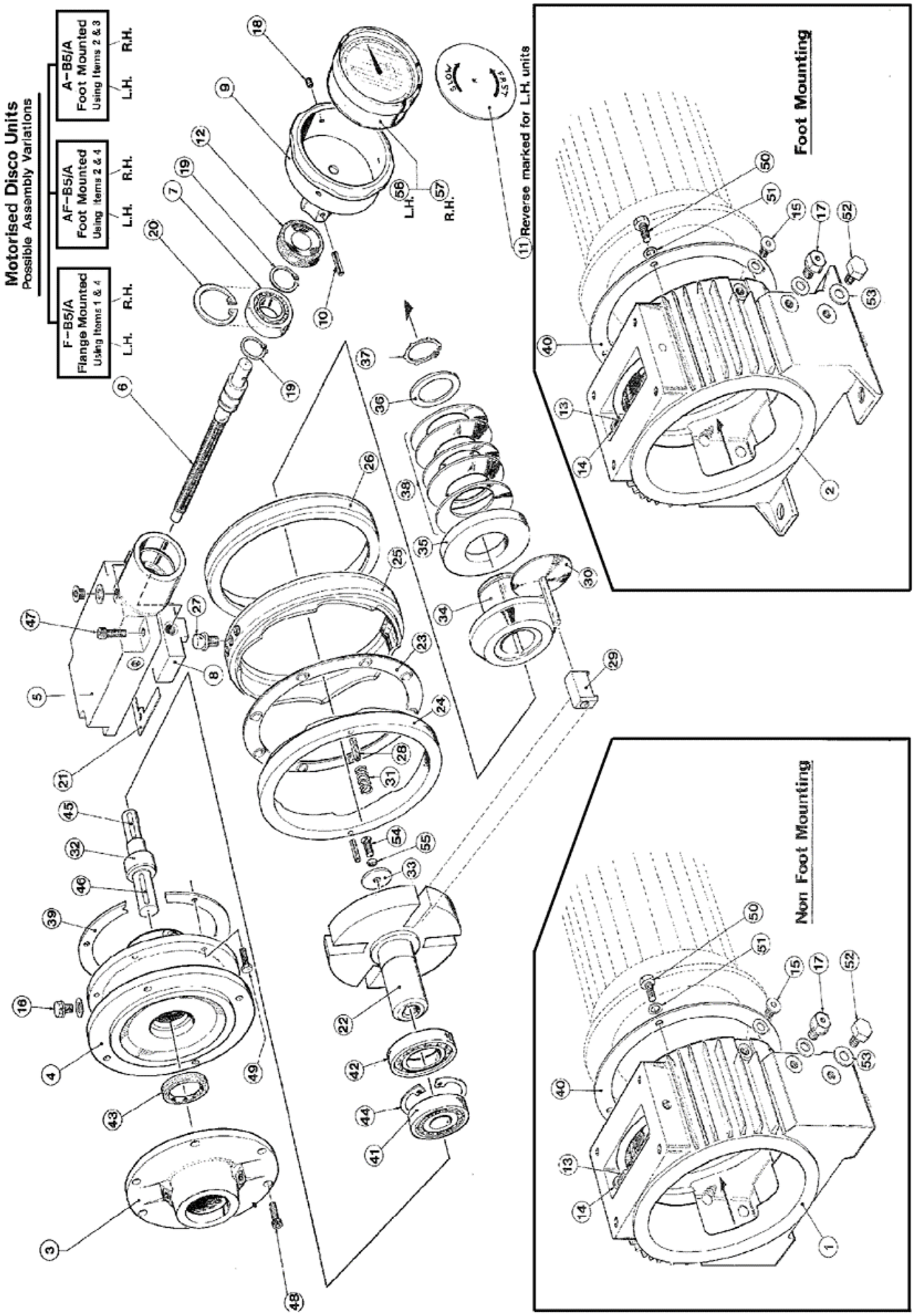

DISCO MECHANICAL VARIABLE SPEED DRIVE

ITEM NO.	DESCRIPTION	DISCO DESIGNATION, PART NUMBER AND QUANTITY																	
		02*		03		04		15		24		26		36		46		48	
		PT.NO.	QT	PT.NO.	QT	PT.NO.	QT	PT.NO.	QT	PT.NO.	QT	PT.NO.	QT	PT.NO.	QT	PT.NO.	QT	PT.NO.	QT
1	F-B5/A MAIN HOUSING (NO FEET)																		
2	A-B5/A MAIN HOUSING (FEET)																		
3	OUTPUT COVER																		
4	OUTPUT FLANGE																		
5	CONTROL HOUSING																		
6	CONTROL SCREW SPINDLE	02015	1	03015	1	04015	1	04015	1	24015	1	24015	1	36015	1	36015	1	36015	1
7	CONTROL HOUSING BEARING	02016	1	03016	1	02070	1	02070	1	02070	1	02070	1	36016	1	36016	1	36016	1
8	CONTROL BLOCK																		
9	HAND WHEEL																		
10	HAND WHEEL LOCKING PIN																		
11	FAST – SLOW PLATE																		
12	CONTROL HOUSING OIL SEAL	02021	1	03021	1	02074	1	02074	1	02074	1	02074	1	36021	1	36021	1	36021	1
13	CONTROL STOP SCREW																		
14	CONTROL STOP LOCKNUT																		
15	FILLER PLUG																		
16	BREATHER PLUG																		
17	LEVEL PLUG																		
18	HAND WHEEL GRUB																		
19	CONTROL SPINDLE CIRCLIP																		
20	CONTROL HOUSING CIRCLIP																		
21	CONTROL HOUSING GASKET																		
22	PLANET CARRIER	02032	1	03032	1	04032	1	15032	1	24032	1	26032	1	36032A	1	46032A	1	48032A	1
23	BALL CAGE ASSY	02033/4	1	03033/4	1	04033/4	1	15033/4	1	24033/4	1	24033/4	1	36033/4	1	46033/4	1	46033/4	1
24	L/H RING	02035	1	03035	1	04035	1	15035	1	24035	1	24035	1	36035	1	46035	1	46035	1
25	CENTRE RING	02036	1	03036	1	04036	1	15036	1	24036	1	24036	1	36036	1	46036	1	46036	1
26	R/H RING	02037	1	03037	1	04037	1	15037	1	24037	1	24037	1	36037	1	46037	1	46037	1
27	CONTROL STUD	02038	1	02038	1	04038	1	15038	1	24038	1	24038	1	36038	1	36038	1	36038	1
28	L/H RING LOCKING PIN																		
29	PLANET BUSH	02040	3	03040	4	04040	4	15040	5	24040	4	24040	6	36040A	6	36040A	6	36040A	8
30	PLANET	02041	3	03041	4	04041	4	15041	5	24041	4	24041	6	36041A	6	36041A	6	36041A	8
31	L/H COIL SPRING																		
32	OUTPUT SHAFT	02045	1	03045	1	04045	1	15045	1	24045	1	24045	1	36045	1	46045	1	46045	1
33	CARRIER RETAINING WASHER																		
34	L/H SUN (INPUT ASSY)	02052	1	03052	1	04052	1	15052	1	24052	1	24052	1	36052A	1	46052A	1	46052A	1
35	R/H SUN (INPUT ASSY)	02053	1	03053	1	04053	1	15053	1	24053	1	24053	1	36053	1	46053	1	46053	1
36	RETAINING COLLAR	02054	1	03054	1	04054	1	15054	1	24054	1	26054	1	36054	1	46054	1	48054	1
37	SPRING RETAINING CIRCLIP																		
38	DISC SPRING	02056	5	03056	3	04056	5	15056	5	24054	9	26054	5	36056	9	46056	9	46056	9
39	OUTPUT COVER GASKET																		
40	MOTOR GASKET																		
41	OUTPUT BEARING	02070	2	03070	2	04070	1	15070	1	24070	1	24070	1	36070	1	46070	1	46070	1
42	CARRIER BEARING					04072	1	15072	1	4144	1	4144	1	36072	1	46072	1	46072	1
43	OUTPUT OIL SEAL			135209	1	04074	1	15074	1	24074	1	24074	1	36074	1	46074	1	46074	1
45	OUTPUT CIRCLIP																		
46	OUTPUT INNER KEY																		
47	OUTPUT OUTER KEY																		
48	OUTPUT COVER GASKET																		
49	OUTPUT FLANGE SCREW																		
50	MOTOR FLANGE SCREW																		
51	MOTOR FIXING WASHER																		
52	MAGNETIC OIL DRAIN PLUG																		
53	FIBER WASHER																		
54	CARRIER RETAINING SCREW																		
55	STAR WASHER																		
56	L/H INDICATOR																		
57	R/H INDICATOR																		

INTENTIONALLY LEFT BLANK

7. GEARBOX RATIOS

The following tables indicate available calculated ratios.

RED highlighted ratios are untested and therefore non-standard units. These ratios cannot be certified. No service factors are available for these ratios.

YELLOW highlighted ratios have a nitride first pair.

Even though the ratio lists are quite comprehensive we are able to manufacture other ratios as all gears are manufactured by us, in house. For bespoke unit quotes or any other questions please contact us.

All our gearboxes can be compoundable to give infinite ratio variations making our units highly adaptable for any given situation.

These are ACTUAL RATIOS and do not take into account for any mechanical losses.

ESR50

OUTPUT SPEEDS (NOMINAL)				OUTPUT	FIRST PAIR			SECOND PAIR			THIRD PAIR		
3000	1500	1000	750	RATIO	PINION	WHEEL	RATIO:1	PINION	WHEEL	RATIO:1	PINION	WHEEL	RATIO:1
25.7	12.9	8.6	6.4	**116.61**	17	79	4.647	17	79	4.647	15	81	5.400
29.5	14.7	9.8	7.4	**101.70**	19	77	4.053	17	79	4.647	15	81	5.400
33.5	16.7	11.2	8.4	**89.62**	21	75	3.571	17	79	4.647	15	81	5.400
37.7	18.8	12.6	9.4	**79.65**	23	73	3.174	17	79	4.647	15	81	5.400
42.1	21.0	14.0	10.5	**71.27**	25	71	2.840	17	79	4.647	15	81	5.400
43.8	21.9	14.6	10.9	**68.54**	17	79	4.647	17	79	4.647	23	73	3.174
46.8	23.4	15.6	11.7	**64.13**	27	69	2.556	17	79	4.647	15	81	5.400
50.2	25.1	16.7	12.5	**59.77**	19	77	4.053	17	79	4.647	23	73	3.174
51.7	25.9	17.2	12.9	**57.98**	29	67	2.310	17	79	4.647	15	81	5.400
57.0	28.5	19.0	14.2	**52.68**	21	75	3.571	17	79	4.647	23	73	3.174
57.0	28.5	19.0	14.3	**52.62**	31	65	2.097	17	79	4.647	15	81	5.400
62.6	31.3	20.9	15.7	**47.91**	33	63	1.909	17	79	4.647	15	81	5.400
64.1	32.0	21.4	16.0	**46.81**	23	73	3.174	17	79	4.647	23	73	3.174
68.6	34.3	22.9	17.1	**43.74**	35	61	1.743	17	79	4.647	15	81	5.400
71.6	35.8	23.9	17.9	**41.89**	25	71	2.840	17	79	4.647	23	73	3.174
75.0	37.5	25.0	18.7	**40.01**	37	59	1.595	17	79	4.647	15	81	5.400
79.6	39.8	26.5	19.9	**37.69**	27	69	2.556	17	79	4.647	23	73	3.174
88.0	44.0	29.3	22.0	**34.08**	29	67	2.310	17	79	4.647	23	73	3.174
95.1	47.5	31.7	23.8	**31.56**	17	79	4.647	17	79	4.647	39	57	1.462
97.0	48.5	32.3	24.3	**30.93**	31	65	2.097	17	79	4.647	23	73	3.174
106.5	53.3	35.5	26.6	**28.16**	33	63	1.909	17	79	4.647	23	73	3.174
109.0	54.5	36.3	27.2	**27.52**	19	77	4.053	17	79	4.647	39	57	1.462
116.7	58.4	38.9	29.2	**25.71**	35	61	1.743	17	79	4.647	23	73	3.174
119.5	59.8	39.8	29.9	**25.09**	17	79	4.647				15	81	5.400
123.7	61.8	41.2	30.9	**24.26**	21	75	3.571	17	79	4.647	39	57	1.462
127.6	63.8	42.5	31.9	**23.52**	37	59	1.595	17	79	4.647	23	73	3.174
137.1	68.5	45.7	34.3	**21.88**	19	77	4.053				15	81	5.400
139.2	69.6	46.4	34.8	**21.56**	23	73	3.174	17	79	4.647	39	57	1.462
155.5	77.8	51.8	38.9	**19.29**	25	71	2.840	17	79	4.647	39	57	1.462
155.6	77.8	51.9	38.9	**19.29**	21	75	3.571				15	81	5.400
172.8	86.4	57.6	43.2	**17.36**	27	69	2.556	17	79	4.647	39	57	1.462
175.0	87.5	58.3	43.8	**17.14**	23	73	3.174				15	81	5.400
191.2	95.6	63.7	47.8	**15.69**	29	67	2.310	17	79	4.647	39	57	1.462
195.6	97.8	65.2	48.9	**15.34**	25	71	2.840				15	81	5.400
203.4	101.7	67.8	50.8	**14.75**	17	79	4.647				23	73	3.174
210.7	105.3	70.2	52.7	**14.24**	31	65	2.097	17	79	4.647	39	57	1.462
217.4	108.7	72.5	54.3	**13.80**	27	69	2.556				15	81	5.400
231.4	115.7	77.1	57.8	**12.97**	33	63	1.909	17	79	4.647	39	57	1.462
233.2	116.6	77.7	58.3	**12.86**	19	77	4.053				23	73	3.174
240.5	120.2	80.2	60.1	**12.48**	29	67	2.310				15	81	5.400
253.4	126.7	84.5	63.4	**11.84**	35	61	1.743	17	79	4.647	39	57	1.462
264.7	132.3	88.2	66.2	**11.34**	21	75	3.571				23	73	3.174
265.0	132.5	88.3	66.2	**11.32**	31	65	2.097				15	81	5.400
277.0	138.5	92.3	69.3	**10.83**	37	59	1.595	17	79	4.647	39	57	1.462
291.0	145.5	97.0	72.8	**10.31**	33	63	1.909				15	81	5.400
297.8	148.9	99.3	74.5	**10.07**	23	73	3.174				23	73	3.174
318.8	159.4	106.3	79.7	**9.41**	35	61	1.743				15	81	5.400
332.8	166.4	110.9	83.2	**9.01**	25	71	2.840				23	73	3.174
348.4	174.2	116.1	87.1	**8.61**	37	59	1.595				15	81	5.400
369.9	184.9	123.3	92.5	**8.11**	27	69	2.556				23	73	3.174
409.1	204.6	136.4	102.3	**7.33**	29	67	2.310				23	73	3.174
441.7	220.9	147.2	110.4	**6.79**	17	79	4.647				39	57	1.462
450.8	225.4	150.3	112.7	**6.65**	31	65	2.097				23	73	3.174
495.1	247.6	165.0	123.8	**6.06**	33	63	1.909				23	73	3.174
506.5	253.2	168.8	126.6	**5.92**	19	77	4.053				39	57	1.462
542.3	271.2	180.8	135.6	**5.53**	35	61	1.743				23	73	3.174
574.7	287.4	191.6	143.7	**5.22**	21	75	3.571				39	57	1.462
592.8	296.4	197.6	148.2	**5.06**	37	59	1.595				23	73	3.174
646.7	323.4	215.6	161.7	**4.64**	23	73	3.174				39	57	1.462
722.8	361.4	240.9	180.7	**4.15**	25	71	2.840				39	57	1.462
803.2	401.6	267.7	200.8	**3.74**	27	69	2.556				39	57	1.462
888.5	444.2	296.2	222.1	**3.38**	29	67	2.310				39	57	1.462
978.9	489.5	326.3	244.7	**3.06**	31	65	2.097				39	57	1.462
1075.2	537.6	358.4	268.8	**2.79**	33	63	1.909				39	57	1.462
1177.7	588.9	392.6	294.4	**2.55**	35	61	1.743				39	57	1.462
1287.2	643.6	429.1	321.8	**2.33**	37	59	1.595				39	57	1.462

ESR00

OUTPUT SPEEDS (NOMINAL)				OUTPUT	FIRST PAIR			SECOND PAIR			THIRD PAIR		
3000	1500	1000	750	RATIO	PINION	WHEEL	RATIO:1	PINION	WHEEL	RATIO:1	PINION	WHEEL	RATIO:1
25.5	12.8	8.5	6.4	**117.63**	17	79	4.647	16	75	4.688	15	81	5.400
29.2	14.6	9.7	7.3	**102.58**	19	77	4.053	16	75	4.688	15	81	5.400
33.2	16.6	11.1	8.3	**90.40**	21	75	3.571	16	75	4.688	15	81	5.400
37.3	18.7	12.4	9.3	**80.34**	23	73	3.174	16	75	4.688	15	81	5.400
41.7	20.9	13.9	10.4	**71.89**	25	71	2.840	16	75	4.688	15	81	5.400
43.4	21.7	14.5	10.8	**69.14**	17	79	4.647	16	75	4.688	23	73	3.174
46.4	23.2	15.5	11.6	**64.69**	27	69	2.556	16	75	4.688	15	81	5.400
49.8	24.9	16.6	12.4	**60.29**	19	77	4.053	16	75	4.688	23	73	3.174
51.3	25.6	17.1	12.8	**58.48**	29	67	2.310	16	75	4.688	15	81	5.400
56.5	28.2	18.8	14.1	**53.13**	21	75	3.571	16	75	4.688	23	73	3.174
56.5	28.3	18.8	14.1	**53.07**	31	65	2.097	16	75	4.688	15	81	5.400
62.1	31.0	20.7	15.5	**48.32**	33	63	1.909	16	75	4.688	15	81	5.400
63.5	31.8	21.2	15.9	**47.22**	23	73	3.174	16	75	4.688	23	73	3.174
68.0	34.0	22.7	17.0	**44.12**	35	61	1.743	16	75	4.688	15	81	5.400
71.0	35.5	23.7	17.8	**42.25**	25	71	2.840	16	75	4.688	23	73	3.174
74.3	37.2	24.8	18.6	**40.36**	37	59	1.595	16	75	4.688	15	81	5.400
78.9	39.5	26.3	19.7	**38.02**	27	69	2.556	16	75	4.688	23	73	3.174
87.3	43.6	29.1	21.8	**34.37**	29	67	2.310	16	75	4.688	23	73	3.174
94.2	47.1	31.4	23.6	**31.84**	17	79	4.647	16	75	4.688	39	57	1.462
96.2	48.1	32.1	24.0	**31.20**	31	65	2.097	16	75	4.688	23	73	3.174
105.6	52.8	35.2	26.4	**28.40**	33	63	1.909	16	75	4.688	23	73	3.174
108.1	54.0	36.0	27.0	**27.76**	19	77	4.053	16	75	4.688	39	57	1.462
115.7	57.8	38.6	28.9	**25.93**	35	61	1.743	16	75	4.688	23	73	3.174
119.5	59.8	39.8	29.9	**25.09**	17	79	4.647				15	81	5.400
122.6	61.3	40.9	30.7	**24.47**	21	75	3.571	16	75	4.688	39	57	1.462
126.5	63.2	42.2	31.6	**23.72**	37	59	1.595	16	75	4.688	23	73	3.174
137.1	68.5	45.7	34.3	**21.88**	19	77	4.053				15	81	5.400
138.0	69.0	46.0	34.5	**21.74**	23	73	3.174	16	75	4.688	39	57	1.462
154.2	77.1	51.4	38.5	**19.46**	25	71	2.840	16	75	4.688	39	57	1.462
155.6	77.8	51.9	38.9	**19.29**	21	75	3.571				15	81	5.400
171.4	85.7	57.1	42.8	**17.51**	27	69	2.556	16	75	4.688	39	57	1.462
175.0	87.5	58.3	43.8	**17.14**	23	73	3.174				15	81	5.400
189.5	94.8	63.2	47.4	**15.83**	29	67	2.310	16	75	4.688	39	57	1.462
195.6	97.8	65.2	48.9	**15.34**	25	71	2.840				15	81	5.400
203.4	101.7	67.8	50.8	**14.75**	17	79	4.647				23	73	3.174
208.8	104.4	69.6	52.2	**14.36**	31	65	2.097	16	75	4.688	39	57	1.462
217.4	108.7	72.5	54.3	**13.80**	27	69	2.556				15	81	5.400
229.4	114.7	76.5	57.3	**13.08**	33	63	1.909	16	75	4.688	39	57	1.462
233.2	116.6	77.7	58.3	**12.86**	19	77	4.053				23	73	3.174
240.5	120.2	80.2	60.1	**12.48**	29	67	2.310				15	81	5.400
251.3	125.6	83.8	62.8	**11.94**	35	61	1.743	16	75	4.688	39	57	1.462
264.7	132.3	88.2	66.2	**11.34**	21	75	3.571				23	73	3.174
265.0	132.5	88.3	66.2	**11.32**	31	65	2.097				15	81	5.400
274.6	137.3	91.5	68.7	**10.92**	37	59	1.595	16	75	4.688	39	57	1.462
291.0	145.5	97.0	72.8	**10.31**	33	63	1.909				15	81	5.400
297.8	148.9	99.3	74.5	**10.07**	23	73	3.174				23	73	3.174
318.8	159.4	106.3	79.7	**9.41**	35	61	1.743				15	81	5.400
332.8	166.4	110.9	83.2	**9.01**	25	71	2.840				23	73	3.174
348.4	174.2	116.1	87.1	**8.61**	37	59	1.595				15	81	5.400
369.9	184.9	123.3	92.5	**8.11**	27	69	2.556				23	73	3.174
409.1	204.6	136.4	102.3	**7.33**	29	67	2.310				23	73	3.174
441.7	220.9	147.2	110.4	**6.79**	17	79	4.647				39	57	1.462
450.8	225.4	150.3	112.7	**6.65**	31	65	2.097				23	73	3.174
495.1	247.6	165.0	123.8	**6.06**	33	63	1.909				23	73	3.174
506.5	253.2	168.8	126.6	**5.92**	19	77	4.053				39	57	1.462
542.3	271.2	180.8	135.6	**5.53**	35	61	1.743				23	73	3.174
574.7	287.4	191.6	143.7	**5.22**	21	75	3.571				39	57	1.462
592.8	296.4	197.6	148.2	**5.06**	37	59	1.595				23	73	3.174
646.7	323.4	215.6	161.7	**4.64**	23	73	3.174				39	57	1.462
722.8	361.4	240.9	180.7	**4.15**	25	71	2.840				39	57	1.462
803.2	401.6	267.7	200.8	**3.74**	27	69	2.556				39	57	1.462
888.5	444.2	296.2	222.1	**3.38**	29	67	2.310				39	57	1.462
978.9	489.5	326.3	244.7	**3.06**	31	65	2.097				39	57	1.462
1075.2	537.6	358.4	268.8	**2.79**	33	63	1.909				39	57	1.462
1177.7	588.9	392.6	294.4	**2.55**	35	61	1.743				39	57	1.462
1287.2	643.6	429.1	321.8	**2.33**	37	59	1.595				39	57	1.462

ESR1

OUTPUT SPEEDS (NOMINAL)				OUTPUT	FIRST PAIR			SECOND PAIR			THIRD PAIR		
3000	1500	1000	750	RATIO	PINION	WHEEL	RATIO:1	PINION	WHEEL	RATIO:1	PINION	WHEEL	RATIO:1
25.9	12.9	8.6	6.5	**115.92**	20	92	4.600	15	70	4.667	15	81	5.400
29.4	14.7	9.8	7.4	**101.95**	22	89	4.045	15	70	4.667	15	81	5.400
33.2	16.6	11.1	8.3	**90.30**	24	86	3.583	15	70	4.667	15	81	5.400
36.8	18.4	12.3	9.2	**81.42**	26	84	3.231	15	70	4.667	15	81	5.400
41.6	20.8	13.9	10.4	**72.12**	29	83	2.862	15	70	4.667	15	81	5.400
44.0	22.0	14.7	11.0	**68.13**	20	92	4.600	15	70	4.667	23	73	3.174
46.1	23.1	15.4	11.5	**65.03**	31	80	2.581	15	70	4.667	15	81	5.400
50.1	25.0	16.7	12.5	**59.92**	22	89	4.045	15	70	4.667	23	73	3.174
51.9	25.9	17.3	13.0	**57.81**	34	78	2.294	15	70	4.667	15	81	5.400
56.4	28.2	18.8	14.1	**53.20**	36	76	2.111	15	70	4.667	15	81	5.400
56.5	28.3	18.8	14.1	**53.07**	24	86	3.583	15	70	4.667	23	73	3.174
62.7	31.3	20.9	15.7	**47.85**	26	84	3.231	15	70	4.667	23	73	3.174
62.8	31.4	20.9	15.7	**47.75**	38	72	1.895	15	70	4.667	15	81	5.400
68.0	34.0	22.7	17.0	**44.10**	40	70	1.750	15	70	4.667	15	81	5.400
70.8	35.4	23.6	17.7	**42.39**	29	83	2.862	15	70	4.667	23	73	3.174
75.3	37.6	25.1	18.8	**39.85**	43	68	1.581	15	70	4.667	15	81	5.400
78.5	39.2	26.2	19.6	**38.22**	31	80	2.581	15	70	4.667	23	73	3.174
88.3	44.1	29.4	22.1	**33.98**	34	78	2.294	15	70	4.667	23	73	3.174
95.6	47.8	31.9	23.9	**31.37**	20	92	4.600	15	70	4.667	39	57	1.462
95.9	48.0	32.0	24.0	**31.27**	36	76	2.111	15	70	4.667	23	73	3.174
106.9	53.4	35.6	26.7	**28.06**	38	72	1.895	15	70	4.667	23	73	3.174
108.7	54.4	36.2	27.2	**27.59**	22	89	4.045	15	70	4.667	39	57	1.462
115.7	57.9	38.6	28.9	**25.92**	40	70	1.750	15	70	4.667	23	73	3.174
120.8	60.4	40.3	30.2	**24.84**	20	92	4.600				15	81	5.400
122.7	61.4	40.9	30.7	**24.44**	24	86	3.583	15	70	4.667	39	57	1.462
128.1	64.0	42.7	32.0	**23.42**	43	68	1.581	15	70	4.667	23	73	3.174
136.1	68.1	45.4	34.0	**22.04**	26	84	3.231	15	70	4.667	39	57	1.462
137.3	68.7	45.8	34.3	**21.85**	22	89	4.045				15	81	5.400
153.7	76.8	51.2	38.4	**19.52**	29	83	2.862	15	70	4.667	39	57	1.462
155.0	77.5	51.7	38.8	**19.35**	24	86	3.583				15	81	5.400
170.4	85.2	56.8	42.6	**17.60**	31	80	2.581	15	70	4.667	39	57	1.462
172.0	86.0	57.3	43.0	**17.45**	26	84	3.231				15	81	5.400
191.7	95.9	63.9	47.9	**15.65**	34	78	2.294	15	70	4.667	39	57	1.462
194.1	97.1	64.7	48.5	**15.46**	29	83	2.862				15	81	5.400
205.5	102.7	68.5	51.4	**14.60**	20	92	4.600				23	73	3.174
208.3	104.2	69.4	52.1	**14.40**	36	76	2.111	15	70	4.667	39	57	1.462
215.3	107.6	71.8	53.8	**13.94**	31	80	2.581				15	81	5.400
232.1	116.1	77.4	58.0	**12.92**	38	72	1.895	15	70	4.667	39	57	1.462
233.6	116.8	77.9	58.4	**12.84**	22	89	4.045				23	73	3.174
242.2	121.1	80.7	60.5	**12.39**	34	78	2.294				15	81	5.400
251.3	125.7	83.8	62.8	**11.94**	40	70	1.750	15	70	4.667	39	57	1.462
263.2	131.6	87.7	65.8	**11.40**	36	76	2.111				15	81	5.400
263.8	131.9	87.9	65.9	**11.37**	24	86	3.583				23	73	3.174
278.1	139.1	92.7	69.5	**10.79**	43	68	1.581	15	70	4.667	39	57	1.462
292.6	146.3	97.5	73.1	**10.25**	26	84	3.231				23	73	3.174
293.2	146.6	97.7	73.3	**10.23**	38	72	1.895				15	81	5.400
317.5	158.7	105.8	79.4	**9.45**	40	70	1.750				15	81	5.400
330.3	165.1	110.1	82.6	**9.08**	29	83	2.862				23	73	3.174
351.3	175.7	117.1	87.8	**8.54**	43	68	1.581				15	81	5.400
366.3	183.1	122.1	91.6	**8.19**	31	80	2.581				23	73	3.174
412.0	206.0	137.3	103.0	**7.28**	34	78	2.294				23	73	3.174
446.2	223.1	148.7	111.6	**6.72**	20	92	4.600				39	57	1.462
447.7	223.9	149.2	111.9	**6.70**	36	76	2.111				23	73	3.174
498.9	249.4	166.3	124.7	**6.01**	38	72	1.895				23	73	3.174
507.4	253.7	169.1	126.8	**5.91**	22	89	4.045				39	57	1.462
540.1	270.1	180.0	135.0	**5.55**	40	70	1.750				23	73	3.174
572.8	286.4	190.9	143.2	**5.24**	24	86	3.583				39	57	1.462
597.7	298.9	199.2	149.4	**5.02**	43	68	1.581				23	73	3.174
635.3	317.7	211.8	158.8	**4.72**	26	84	3.231				39	57	1.462
717.2	358.6	239.1	179.3	**4.18**	29	83	2.862				39	57	1.462
795.4	397.7	265.1	198.8	**3.77**	31	80	2.581				39	57	1.462
894.7	447.4	298.2	223.7	**3.35**	34	78	2.294				39	57	1.462
972.3	486.1	324.1	243.1	**3.09**	36	76	2.111				39	57	1.462
1083.3	541.7	361.1	270.8	**2.77**	38	72	1.895				39	57	1.462
1172.9	586.5	391.0	293.2	**2.56**	40	70	1.750				39	57	1.462
1298.0	649.0	432.7	324.5	**2.31**	43	68	1.581				39	57	1.462

ESR2

OUTPUT SPEEDS (NOMINAL)				OUTPUT	FIRST PAIR			SECOND PAIR			THIRD PAIR		
3000	1500	1000	750	RATIO	PINION	WHEEL	RATIO:1	PINION	WHEEL	RATIO:1	PINION	WHEEL	RATIO:1
25.9	12.9	8.6	6.5	**115.92**	20	92	4.600	15	70	4.667	15	81	5.400
29.4	14.7	9.8	7.4	**101.95**	22	89	4.045	15	70	4.667	15	81	5.400
33.2	16.6	11.1	8.3	**90.30**	24	86	3.583	15	70	4.667	15	81	5.400
36.8	18.4	12.3	9.2	**81.42**	26	84	3.231	15	70	4.667	15	81	5.400
41.6	20.8	13.9	10.4	**72.12**	29	83	2.862	15	70	4.667	15	81	5.400
44.0	22.0	14.7	11.0	**68.13**	20	92	4.600	15	70	4.667	23	73	3.174
46.1	23.1	15.4	11.5	**65.03**	31	80	2.581	15	70	4.667	15	81	5.400
50.1	25.0	16.7	12.5	**59.92**	22	89	4.045	15	70	4.667	23	73	3.174
51.9	25.9	17.3	13.0	**57.81**	34	78	2.294	15	70	4.667	15	81	5.400
56.4	28.2	18.8	14.1	**53.20**	36	76	2.111	15	70	4.667	15	81	5.400
56.5	28.3	18.8	14.1	**53.07**	24	86	3.583	15	70	4.667	23	73	3.174
62.7	31.3	20.9	15.7	**47.85**	26	84	3.231	15	70	4.667	23	73	3.174
62.8	31.4	20.9	15.7	**47.75**	38	72	1.895	15	70	4.667	15	81	5.400
68.0	34.0	22.7	17.0	**44.10**	40	70	1.750	15	70	4.667	15	81	5.400
70.8	35.4	23.6	17.7	**42.39**	29	83	2.862	15	70	4.667	23	73	3.174
75.3	37.6	25.1	18.8	**39.85**	43	68	1.581	15	70	4.667	15	81	5.400
78.5	39.2	26.2	19.6	**38.22**	31	80	2.581	15	70	4.667	23	73	3.174
88.3	44.1	29.4	22.1	**33.98**	34	78	2.294	15	70	4.667	23	73	3.174
95.6	47.8	31.9	23.9	**31.37**	20	92	4.600	15	70	4.667	39	57	1.462
95.9	48.0	32.0	24.0	**31.27**	36	76	2.111	15	70	4.667	23	73	3.174
106.9	53.4	35.6	26.7	**28.06**	38	72	1.895	15	70	4.667	23	73	3.174
108.7	54.4	36.2	27.2	**27.59**	22	89	4.045	15	70	4.667	39	57	1.462
115.7	57.9	38.6	28.9	**25.92**	40	70	1.750	15	70	4.667	23	73	3.174
120.8	60.4	40.3	30.2	**24.84**	20	92	4.600				15	81	5.400
122.7	61.4	40.9	30.7	**24.44**	24	86	3.583	15	70	4.667	39	57	1.462
128.1	64.0	42.7	32.0	**23.42**	43	68	1.581	15	70	4.667	23	73	3.174
136.1	68.1	45.4	34.0	**22.04**	26	84	3.231	15	70	4.667	39	57	1.462
137.3	68.7	45.8	34.3	**21.85**	22	89	4.045				15	81	5.400
153.7	76.8	51.2	38.4	**19.52**	29	83	2.862	15	70	4.667	39	57	1.462
155.0	77.5	51.7	38.8	**19.35**	24	86	3.583				15	81	5.400
170.4	85.2	56.8	42.6	**17.60**	31	80	2.581	15	70	4.667	39	57	1.462
172.0	86.0	57.3	43.0	**17.45**	26	84	3.231				15	81	5.400
191.7	95.9	63.9	47.9	**15.65**	34	78	2.294	15	70	4.667	39	57	1.462
194.1	97.1	64.7	48.5	**15.46**	29	83	2.862				15	81	5.400
205.5	102.7	68.5	51.4	**14.60**	20	92	4.600				23	73	3.174
208.3	104.2	69.4	52.1	**14.40**	36	76	2.111	15	70	4.667	39	57	1.462
215.3	107.6	71.8	53.8	**13.94**	31	80	2.581				15	81	5.400
232.1	116.1	77.4	58.0	**12.92**	38	72	1.895	15	70	4.667	39	57	1.462
233.6	116.8	77.9	58.4	**12.84**	22	89	4.045				23	73	3.174
242.2	121.1	80.7	60.5	**12.39**	34	78	2.294				15	81	5.400
251.3	125.7	83.8	62.8	**11.94**	40	70	1.750	15	70	4.667	39	57	1.462
263.2	131.6	87.7	65.8	**11.40**	36	76	2.111				15	81	5.400
263.8	131.9	87.9	65.9	**11.37**	24	86	3.583				23	73	3.174
278.1	139.1	92.7	69.5	**10.79**	43	68	1.581	15	70	4.667	39	57	1.462
292.6	146.3	97.5	73.1	**10.25**	26	84	3.231				23	73	3.174
293.2	146.6	97.7	73.3	**10.23**	38	72	1.895				15	81	5.400
317.5	158.7	105.8	79.4	**9.45**	40	70	1.750				15	81	5.400
330.3	165.1	110.1	82.6	**9.08**	29	83	2.862				23	73	3.174
351.3	175.7	117.1	87.8	**8.54**	43	68	1.581				15	81	5.400
366.3	183.1	122.1	91.6	**8.19**	31	80	2.581				23	73	3.174
412.0	206.0	137.3	103.0	**7.28**	34	78	2.294				23	73	3.174
446.2	223.1	148.7	111.6	**6.72**	20	92	4.600				39	57	1.462
447.7	223.9	149.2	111.9	**6.70**	36	76	2.111				23	73	3.174
498.9	249.4	166.3	124.7	**6.01**	38	72	1.895				23	73	3.174
507.4	253.7	169.1	126.8	**5.91**	22	89	4.045				39	57	1.462
540.1	270.1	180.0	135.0	**5.55**	40	70	1.750				23	73	3.174
572.8	286.4	190.9	143.2	**5.24**	24	86	3.583				39	57	1.462
597.7	298.9	199.2	149.4	**5.02**	43	68	1.581				23	73	3.174
635.3	317.7	211.8	158.8	**4.72**	26	84	3.231				39	57	1.462
717.2	358.6	239.1	179.3	**4.18**	29	83	2.862				39	57	1.462
795.4	397.7	265.1	198.8	**3.77**	31	80	2.581				39	57	1.462
894.7	447.4	298.2	223.7	**3.35**	34	78	2.294				39	57	1.462
972.3	486.1	324.1	243.1	**3.09**	36	76	2.111				39	57	1.462
1083.3	541.7	361.1	270.8	**2.77**	38	72	1.895				39	57	1.462
1172.9	586.5	391.0	293.2	**2.56**	40	70	1.750				39	57	1.462
1298.0	649.0	432.7	324.5	**2.31**	43	68	1.581				39	57	1.462

ESR3

OUTPUT SPEEDS (NOMINAL)				OUTPUT	FIRST PAIR			SECOND PAIR			THIRD PAIR		
3000	1500	1000	750	RATIO	PINION	WHEEL	RATIO:1	PINION	WHEEL	RATIO:1	PINION	WHEEL	RATIO:1
25.4	12.7	8.5	6.4	**117.98**	22	103	4.682	15	70	4.667	15	81	5.400
29.5	14.7	9.8	7.4	**101.81**	25	101	4.040	15	70	4.667	15	81	5.400
33.1	16.6	11.0	8.3	**90.53**	27	97	3.593	15	70	4.667	15	81	5.400
37.2	18.6	12.4	9.3	**80.64**	30	96	3.200	15	70	4.667	15	81	5.400
41.4	20.7	13.8	10.4	**72.45**	32	92	2.875	15	70	4.667	15	81	5.400
43.3	21.6	14.4	10.8	**69.35**	22	103	4.682	15	70	4.667	23	73	3.174
46.3	23.1	15.4	11.6	**64.80**	35	90	2.571	15	70	4.667	15	81	5.400
50.1	25.1	16.7	12.5	**59.84**	25	101	4.040	15	70	4.667	23	73	3.174
51.4	25.7	17.1	12.9	**58.36**	38	88	2.316	15	70	4.667	15	81	5.400
56.4	28.2	18.8	14.1	**53.21**	27	97	3.593	15	70	4.667	23	73	3.174
56.7	28.3	18.9	14.2	**52.92**	40	84	2.100	15	70	4.667	15	81	5.400
62.4	31.2	20.8	15.6	**48.06**	43	82	1.907	15	70	4.667	15	81	5.400
63.3	31.6	21.1	15.8	**47.40**	30	96	3.200	15	70	4.667	23	73	3.174
67.8	33.9	22.6	17.0	**44.24**	45	79	1.756	15	70	4.667	15	81	5.400
70.5	35.2	23.5	17.6	**42.58**	32	92	2.875	15	70	4.667	23	73	3.174
75.2	37.6	25.1	18.8	**39.90**	48	76	1.583	15	70	4.667	15	81	5.400
78.8	39.4	26.3	19.7	**38.09**	35	90	2.571	15	70	4.667	23	73	3.174
87.5	43.7	29.2	21.9	**34.30**	38	88	2.316	15	70	4.667	23	73	3.174
93.9	47.0	31.3	23.5	**31.93**	22	103	4.682	15	70	4.667	39	57	1.462
96.4	48.2	32.1	24.1	**31.10**	40	84	2.100	15	70	4.667	23	73	3.174
106.2	53.1	35.4	26.6	**28.25**	43	82	1.907	15	70	4.667	23	73	3.174
108.9	54.4	36.3	27.2	**27.55**	25	101	4.040	15	70	4.667	39	57	1.462
115.4	57.7	38.5	28.8	**26.00**	45	79	1.756	15	70	4.667	23	73	3.174
118.7	59.3	39.6	29.7	**25.28**	22	103	4.682				15	81	5.400
122.4	61.2	40.8	30.6	**24.50**	27	97	3.593	15	70	4.667	39	57	1.462
127.9	64.0	42.6	32.0	**23.45**	48	76	1.583	15	70	4.667	23	73	3.174
137.5	68.7	45.8	34.4	**21.83**	30	96	3.200	15	70	4.667	39	57	1.462
137.5	68.8	45.8	34.4	**21.82**	25	101	4.040				15	81	5.400
153.0	76.5	51.0	38.2	**19.61**	32	92	2.875	15	70	4.667	39	57	1.462
154.6	77.3	51.5	38.7	**19.40**	27	97	3.593				15	81	5.400
171.1	85.5	57.0	42.8	**17.54**	35	90	2.571	15	70	4.667	39	57	1.462
173.6	86.8	57.9	43.4	**17.28**	30	96	3.200				15	81	5.400
189.9	95.0	63.3	47.5	**15.79**	38	88	2.316	15	70	4.667	39	57	1.462
193.2	96.6	64.4	48.3	**15.53**	32	92	2.875				15	81	5.400
201.9	100.9	67.3	50.5	**14.86**	22	103	4.682				23	73	3.174
209.5	104.7	69.8	52.4	**14.32**	40	84	2.100	15	70	4.667	39	57	1.462
216.0	108.0	72.0	54.0	**13.89**	35	90	2.571				15	81	5.400
230.7	115.3	76.9	57.7	**13.01**	43	82	1.907	15	70	4.667	39	57	1.462
234.0	117.0	78.0	58.5	**12.82**	25	101	4.040				23	73	3.174
239.9	119.9	80.0	60.0	**12.51**	38	88	2.316				15	81	5.400
250.5	125.3	83.5	62.6	**11.97**	45	79	1.756	15	70	4.667	39	57	1.462
263.1	131.5	87.7	65.8	**11.40**	27	97	3.593				23	73	3.174
264.6	132.3	88.2	66.1	**11.34**	40	84	2.100				15	81	5.400
277.8	138.9	92.6	69.4	**10.80**	48	76	1.583	15	70	4.667	39	57	1.462
291.3	145.7	97.1	72.8	**10.30**	43	82	1.907				15	81	5.400
295.4	147.7	98.5	73.8	**10.16**	30	96	3.200				23	73	3.174
316.5	158.2	105.5	79.1	**9.48**	45	79	1.756				15	81	5.400
328.8	164.4	109.6	82.2	**9.13**	32	92	2.875				23	73	3.174
350.9	175.4	117.0	87.7	**8.55**	48	76	1.583				15	81	5.400
367.6	183.8	122.5	91.9	**8.16**	35	90	2.571				23	73	3.174
408.2	204.1	136.1	102.0	**7.35**	38	88	2.316				23	73	3.174
438.4	219.2	146.1	109.6	**6.84**	22	103	4.682				39	57	1.462
450.1	225.0	150.0	112.5	**6.67**	40	84	2.100				23	73	3.174
495.7	247.8	165.2	123.9	**6.05**	43	82	1.907				23	73	3.174
508.1	254.0	169.4	127.0	**5.90**	25	101	4.040				39	57	1.462
538.4	269.2	179.5	134.6	**5.57**	45	79	1.756				23	73	3.174
571.4	285.7	190.5	142.8	**5.25**	27	97	3.593				39	57	1.462
597.0	298.5	199.0	149.2	**5.03**	48	76	1.583				23	73	3.174
641.4	320.7	213.8	160.4	**4.68**	30	96	3.200				39	57	1.462
714.0	357.0	238.0	178.5	**4.20**	32	92	2.875				39	57	1.462
798.2	399.1	266.1	199.6	**3.76**	35	90	2.571				39	57	1.462
886.4	443.2	295.5	221.6	**3.38**	38	88	2.316				39	57	1.462
977.4	488.7	325.8	244.4	**3.07**	40	84	2.100				39	57	1.462
1076.4	538.2	358.8	269.1	**2.79**	43	82	1.907				39	57	1.462
1169.2	584.6	389.7	292.3	**2.57**	45	79	1.756				39	57	1.462
1296.4	648.2	432.1	324.1	**2.31**	48	76	1.583				39	57	1.462

ESR35

OUTPUT SPEEDS (NOMINAL)				OUTPUT	FIRST PAIR			SECOND PAIR			THIRD PAIR		
3000	1500	1000	750	RATIO	PINION	WHEEL	RATIO:1	PINION	WHEEL	RATIO:1	PINION	WHEEL	RATIO:1
25.5	12.8	8.5	6.4	**117.60**	15	70	4.667	15	70	4.667	15	81	5.400
29.3	14.7	9.8	7.3	**102.28**	17	69	4.059	15	70	4.667	15	81	5.400
33.3	16.6	11.1	8.3	**90.19**	19	68	3.579	15	70	4.667	15	81	5.400
37.2	18.6	12.4	9.3	**80.64**	20	64	3.200	15	70	4.667	15	81	5.400
41.6	20.8	13.9	10.4	**72.16**	22	63	2.864	15	70	4.667	15	81	5.400
43.4	21.7	14.5	10.9	**69.12**	15	70	4.667	15	70	4.667	23	73	3.174
46.1	23.0	15.4	11.5	**65.10**	24	62	2.583	15	70	4.667	15	81	5.400
49.9	25.0	16.6	12.5	**60.12**	17	69	4.059	15	70	4.667	23	73	3.174
51.6	25.8	17.2	12.9	**58.15**	26	60	2.308	15	70	4.667	15	81	5.400
56.5	28.2	18.8	14.1	**53.10**	28	59	2.107	15	70	4.667	15	81	5.400
56.6	28.3	18.9	14.1	**53.01**	19	68	3.579	15	70	4.667	23	73	3.174
62.7	31.3	20.9	15.7	**47.88**	30	57	1.900	15	70	4.667	15	81	5.400
63.3	31.6	21.1	15.8	**47.40**	20	64	3.200	15	70	4.667	23	73	3.174
68.3	34.2	22.8	17.1	**43.90**	31	54	1.742	15	70	4.667	15	81	5.400
70.7	35.4	23.6	17.7	**42.42**	22	63	2.864	15	70	4.667	23	73	3.174
74.7	37.3	24.9	18.7	**40.16**	32	51	1.594	15	70	4.667	15	81	5.400
78.4	39.2	26.1	19.6	**38.26**	24	62	2.583	15	70	4.667	23	73	3.174
87.8	43.9	29.3	21.9	**34.18**	26	60	2.308	15	70	4.667	23	73	3.174
94.3	47.1	31.4	23.6	**31.83**	15	70	4.667	15	70	4.667	39	57	1.462
96.1	48.1	32.0	24.0	**31.21**	28	59	2.107	15	70	4.667	23	73	3.174
106.6	53.3	35.5	26.7	**28.14**	30	57	1.900	15	70	4.667	23	73	3.174
108.4	54.2	36.1	27.1	**27.68**	17	69	4.059	15	70	4.667	39	57	1.462
116.3	58.1	38.8	29.1	**25.80**	31	54	1.742	15	70	4.667	23	73	3.174
119.0	59.5	39.7	29.8	**25.20**	15	70	4.667				15	81	5.400
122.9	61.4	41.0	30.7	**24.41**	19	68	3.579	15	70	4.667	39	57	1.462
127.1	63.5	42.4	31.8	**23.61**	32	51	1.594	15	70	4.667	23	73	3.174
136.9	68.4	45.6	34.2	**21.92**	17	69	4.059				15	81	5.400
137.5	68.7	45.8	34.4	**21.83**	20	64	3.200	15	70	4.667	39	57	1.462
153.6	76.8	51.2	38.4	**19.53**	22	63	2.864	15	70	4.667	39	57	1.462
155.2	77.6	51.7	38.8	**19.33**	19	68	3.579				15	81	5.400
170.3	85.1	56.8	42.6	**17.62**	24	62	2.583	15	70	4.667	39	57	1.462
173.6	86.8	57.9	43.4	**17.28**	20	64	3.200				15	81	5.400
190.6	95.3	63.5	47.7	**15.74**	26	60	2.308	15	70	4.667	39	57	1.462
194.0	97.0	64.7	48.5	**15.46**	22	63	2.864				15	81	5.400
202.5	101.3	67.5	50.6	**14.81**	15	70	4.667				23	73	3.174
208.7	104.4	69.6	52.2	**14.37**	28	59	2.107	15	70	4.667	39	57	1.462
215.1	107.5	71.7	53.8	**13.95**	24	62	2.583				15	81	5.400
231.5	115.7	77.2	57.9	**12.96**	30	57	1.900	15	70	4.667	39	57	1.462
232.9	116.4	77.6	58.2	**12.88**	17	69	4.059				23	73	3.174
240.7	120.4	80.2	60.2	**12.46**	26	60	2.308				15	81	5.400
252.5	126.3	84.2	63.1	**11.88**	31	54	1.742	15	70	4.667	39	57	1.462
263.7	131.8	87.9	65.9	**11.38**	28	59	2.107				15	81	5.400
264.1	132.1	88.0	66.0	**11.36**	19	68	3.579				23	73	3.174
276.0	138.0	92.0	69.0	**10.87**	32	51	1.594	15	70	4.667	39	57	1.462
292.4	146.2	97.5	73.1	**10.26**	30	57	1.900				15	81	5.400
295.4	147.7	98.5	73.8	**10.16**	20	64	3.200				23	73	3.174
318.9	159.5	106.3	79.7	**9.41**	31	54	1.742				15	81	5.400
330.1	165.0	110.0	82.5	**9.09**	22	63	2.864				23	73	3.174
348.6	174.3	116.2	87.1	**8.61**	32	51	1.594				15	81	5.400
365.9	182.9	122.0	91.5	**8.20**	24	62	2.583				23	73	3.174
409.6	204.8	136.5	102.4	**7.32**	26	60	2.308				23	73	3.174
439.8	219.9	146.6	110.0	**6.82**	15	70	4.667				39	57	1.462
448.6	224.3	149.5	112.1	**6.69**	28	59	2.107				23	73	3.174
497.5	248.7	165.8	124.4	**6.03**	30	57	1.900				23	73	3.174
505.7	252.9	168.6	126.4	**5.93**	17	69	4.059				39	57	1.462
542.6	271.3	180.9	135.7	**5.53**	31	54	1.742				23	73	3.174
573.5	286.8	191.2	143.4	**5.23**	19	68	3.579				39	57	1.462
593.1	296.5	197.7	148.3	**5.06**	32	51	1.594				23	73	3.174
641.4	320.7	213.8	160.4	**4.68**	20	64	3.200				39	57	1.462
716.8	358.4	238.9	179.2	**4.19**	22	63	2.864				39	57	1.462
794.6	397.3	264.9	198.6	**3.78**	24	62	2.583				39	57	1.462
889.5	444.7	296.5	222.4	**3.37**	26	60	2.308				39	57	1.462
974.1	487.1	324.7	243.5	**3.08**	28	59	2.107				39	57	1.462
1080.3	540.2	360.1	270.1	**2.78**	30	57	1.900				39	57	1.462
1178.4	589.2	392.8	294.6	**2.55**	31	54	1.742				39	57	1.462
1287.9	644.0	429.3	322.0	**2.33**	32	51	1.594				39	57	1.462

ESR4

OUTPUT SPEEDS (NOMINAL)				OUTPUT	FIRST PAIR			SECOND PAIR			THIRD PAIR		
3000	1500	1000	750	RATIO	PINION	WHEEL	RATIO:1	PINION	WHEEL	RATIO:1	PINION	WHEEL	RATIO:1
25.5	12.8	8.5	6.4	**117.60**	15	70	4.667	15	70	4.667	15	81	5.400
29.3	14.7	9.8	7.3	**102.28**	17	69	4.059	15	70	4.667	15	81	5.400
33.3	16.6	11.1	8.3	**90.19**	19	68	3.579	15	70	4.667	15	81	5.400
37.2	18.6	12.4	9.3	**80.64**	20	64	3.200	15	70	4.667	15	81	5.400
41.6	20.8	13.9	10.4	**72.16**	22	63	2.864	15	70	4.667	15	81	5.400
43.4	21.7	14.5	10.9	**69.12**	15	70	4.667	15	70	4.667	23	73	3.174
46.1	23.0	15.4	11.5	**65.10**	24	62	2.583	15	70	4.667	15	81	5.400
49.9	25.0	16.6	12.5	**60.12**	17	69	4.059	15	70	4.667	23	73	3.174
51.6	25.8	17.2	12.9	**58.15**	26	60	2.308	15	70	4.667	15	81	5.400
56.5	28.2	18.8	14.1	**53.10**	28	59	2.107	15	70	4.667	15	81	5.400
56.6	28.3	18.9	14.1	**53.01**	19	68	3.579	15	70	4.667	23	73	3.174
62.7	31.3	20.9	15.7	**47.88**	30	57	1.900	15	70	4.667	15	81	5.400
63.3	31.6	21.1	15.8	**47.40**	20	64	3.200	15	70	4.667	23	73	3.174
68.3	34.2	22.8	17.1	**43.90**	31	54	1.742	15	70	4.667	15	81	5.400
70.7	35.4	23.6	17.7	**42.42**	22	63	2.864	15	70	4.667	23	73	3.174
74.7	37.3	24.9	18.7	**40.16**	32	51	1.594	15	70	4.667	15	81	5.400
78.4	39.2	26.1	19.6	**38.26**	24	62	2.583	15	70	4.667	23	73	3.174
87.8	43.9	29.3	21.9	**34.18**	26	60	2.308	15	70	4.667	23	73	3.174
94.3	47.1	31.4	23.6	**31.83**	15	70	4.667	15	70	4.667	39	57	1.462
96.1	48.1	32.0	24.0	**31.21**	28	59	2.107	15	70	4.667	23	73	3.174
106.6	53.3	35.5	26.7	**28.14**	30	57	1.900	15	70	4.667	23	73	3.174
108.4	54.2	36.1	27.1	**27.68**	17	69	4.059	15	70	4.667	39	57	1.462
116.3	58.1	38.8	29.1	**25.80**	31	54	1.742	15	70	4.667	23	73	3.174
119.0	59.5	39.7	29.8	**25.20**	15	70	4.667				15	81	5.400
122.9	61.4	41.0	30.7	**24.41**	19	68	3.579	15	70	4.667	39	57	1.462
127.1	63.5	42.4	31.8	**23.61**	32	51	1.594	15	70	4.667	23	73	3.174
136.9	68.4	45.6	34.2	**21.92**	17	69	4.059				15	81	5.400
137.5	68.7	45.8	34.4	**21.83**	20	64	3.200	15	70	4.667	39	57	1.462
153.6	76.8	51.2	38.4	**19.53**	22	63	2.864	15	70	4.667	39	57	1.462
155.2	77.6	51.7	38.8	**19.33**	19	68	3.579				15	81	5.400
170.3	85.1	56.8	42.6	**17.62**	24	62	2.583	15	70	4.667	39	57	1.462
173.6	86.8	57.9	43.4	**17.28**	20	64	3.200				15	81	5.400
190.6	95.3	63.5	47.7	**15.74**	26	60	2.308	15	70	4.667	39	57	1.462
194.0	97.0	64.7	48.5	**15.46**	22	63	2.864				15	81	5.400
202.5	101.3	67.5	50.6	**14.81**	15	70	4.667				23	73	3.174
208.7	104.4	69.6	52.2	**14.37**	28	59	2.107	15	70	4.667	39	57	1.462
215.1	107.5	71.7	53.8	**13.95**	24	62	2.583				15	81	5.400
231.5	115.7	77.2	57.9	**12.96**	30	57	1.900	15	70	4.667	39	57	1.462
232.9	116.4	77.6	58.2	**12.88**	17	69	4.059				23	73	3.174
240.7	120.4	80.2	60.2	**12.46**	26	60	2.308				15	81	5.400
252.5	126.3	84.2	63.1	**11.88**	31	54	1.742	15	70	4.667	39	57	1.462
263.7	131.8	87.9	65.9	**11.38**	28	59	2.107				15	81	5.400
264.1	132.1	88.0	66.0	**11.36**	19	68	3.579				23	73	3.174
276.0	138.0	92.0	69.0	**10.87**	32	51	1.594	15	70	4.667	39	57	1.462
292.4	146.2	97.5	73.1	**10.26**	30	57	1.900				15	81	5.400
295.4	147.7	98.5	73.8	**10.16**	20	64	3.200				23	73	3.174
318.9	159.5	106.3	79.7	**9.41**	31	54	1.742				15	81	5.400
330.1	165.0	110.0	82.5	**9.09**	22	63	2.864				23	73	3.174
348.6	174.3	116.2	87.1	**8.61**	32	51	1.594				15	81	5.400
365.9	182.9	122.0	91.5	**8.20**	24	62	2.583				23	73	3.174
409.6	204.8	136.5	102.4	**7.32**	26	60	2.308				23	73	3.174
439.8	219.9	146.6	110.0	**6.82**	15	70	4.667				39	57	1.462
448.6	224.3	149.5	112.1	**6.69**	28	59	2.107				23	73	3.174
497.5	248.7	165.8	124.4	**6.03**	30	57	1.900				23	73	3.174
505.7	252.9	168.6	126.4	**5.93**	17	69	4.059				39	57	1.462
542.6	271.3	180.9	135.7	**5.53**	31	54	1.742				23	73	3.174
573.5	286.8	191.2	143.4	**5.23**	19	68	3.579				39	57	1.462
593.1	296.5	197.7	148.3	**5.06**	32	51	1.594				23	73	3.174
641.4	320.7	213.8	160.4	**4.68**	20	64	3.200				39	57	1.462
716.8	358.4	238.9	179.2	**4.19**	22	63	2.864				39	57	1.462
794.6	397.3	264.9	198.6	**3.78**	24	62	2.583				39	57	1.462
889.5	444.7	296.5	222.4	**3.37**	26	60	2.308				39	57	1.462
974.1	487.1	324.7	243.5	**3.08**	28	59	2.107				39	57	1.462
1080.3	540.2	360.1	270.1	**2.78**	30	57	1.900				39	57	1.462
1178.4	589.2	392.8	294.6	**2.55**	31	54	1.742				39	57	1.462
1287.9	644.0	429.3	322.0	**2.33**	32	51	1.594				39	57	1.462

ESR4SS

OUTPUT SPEEDS (NOMINAL)				OUTPUT	FIRST PAIR			SECOND PAIR			THIRD PAIR		
3000.0	1500.0	1000.0	750.0	RATIO	PINION	WHEEL	RATIO:1	PINION	WHEEL	RATIO:1	PINION	WHEEL	RATIO:1
35.9	18.0	12.0	9.0	**83.56**	15	70	4.667	16	85	5.313	27	91	3.370
41.3	20.6	13.8	10.3	**72.67**	17	69	4.059	16	85	5.313	27	91	3.370
45.6	22.8	15.2	11.4	**65.79**	15	70	4.667	16	85	5.313	26	69	2.654
46.8	23.4	15.6	11.7	**64.08**	19	68	3.579	16	85	5.313	27	91	3.370
52.4	26.2	17.5	13.1	**57.30**	20	64	3.200	16	85	5.313	27	91	3.370
52.4	26.2	17.5	13.1	**57.22**	17	69	4.059	16	85	5.313	26	69	2.654
58.5	29.3	19.5	14.6	**51.27**	22	63	2.864	16	85	5.313	27	91	3.370
58.7	29.3	19.6	14.7	**51.12**	15	70	4.667	24	78	3.250	27	91	3.370
59.5	29.7	19.8	14.9	**50.46**	19	68	3.579	16	85	5.313	26	69	2.654
64.9	32.4	21.6	16.2	**46.25**	24	62	2.583	16	85	5.313	27	91	3.370
65.5	32.7	21.8	16.4	**45.83**	15	70	4.667	16	85	5.313	33	61	1.848
66.5	33.2	22.2	16.6	**45.12**	20	64	3.200	16	85	5.313	26	69	2.654
67.5	33.7	22.5	16.9	**44.46**	17	69	4.059	24	78	3.250	27	91	3.370
72.6	36.3	24.2	18.2	**41.32**	26	60	2.308	16	85	5.313	27	91	3.370
73.6	36.8	24.5	18.4	**40.77**	15	70	4.667	16	85	5.313	45	74	1.644
74.3	37.2	24.8	18.6	**40.37**	22	63	2.864	16	85	5.313	26	69	2.654
74.5	37.3	24.8	18.6	**40.25**	15	70	4.667	24	78	3.250	26	69	2.654
75.3	37.6	25.1	18.8	**39.86**	17	69	4.059	16	85	5.313	33	61	1.848
76.5	38.3	25.5	19.1	**39.20**	19	68	3.579	24	78	3.250	27	91	3.370
79.5	39.8	26.5	19.9	**37.73**	28	59	2.107	16	85	5.313	27	91	3.370
82.4	41.2	27.5	20.6	**36.42**	24	62	2.583	16	85	5.313	26	69	2.654
84.6	42.3	28.2	21.2	**35.46**	17	69	4.059	16	85	5.313	45	74	1.644
85.4	42.7	28.5	21.3	**35.15**	19	68	3.579	16	85	5.313	33	61	1.848
85.6	42.8	28.5	21.4	**35.05**	20	64	3.200	24	78	3.250	27	91	3.370
85.7	42.8	28.6	21.4	**35.01**	17	69	4.059	24	78	3.250	26	69	2.654
88.2	44.1	29.4	22.0	**34.02**	30	57	1.900	16	85	5.313	27	91	3.370
92.2	46.1	30.7	23.1	**32.54**	26	60	2.308	16	85	5.313	26	69	2.654
95.5	47.7	31.8	23.9	**31.42**	20	64	3.200	16	85	5.313	33	61	1.848
95.6	47.8	31.9	23.9	**31.37**	22	63	2.864	24	78	3.250	27	91	3.370
96.0	48.0	32.0	24.0	**31.27**	19	68	3.579	16	85	5.313	45	74	1.644
96.2	48.1	32.1	24.0	**31.19**	31	54	1.742	16	85	5.313	27	91	3.370
97.2	48.6	32.4	24.3	**30.87**	19	68	3.579	24	78	3.250	26	69	2.654
101.0	50.5	33.7	25.2	**29.71**	28	59	2.107	16	85	5.313	26	69	2.654
105.1	52.6	35.0	26.3	**28.54**	32	51	1.594	16	85	5.313	27	91	3.370
106.0	53.0	35.3	26.5	**28.30**	24	62	2.583	24	78	3.250	27	91	3.370
106.7	53.3	35.6	26.7	**28.12**	22	63	2.864	16	85	5.313	33	61	1.848
107.0	53.5	35.7	26.8	**28.04**	15	70	4.667	24	78	3.250	33	61	1.848
107.3	53.7	35.8	26.8	**27.96**	20	64	3.200	16	85	5.313	45	74	1.644
108.7	54.3	36.2	27.2	**27.60**	20	64	3.200	24	78	3.250	26	69	2.654
112.0	56.0	37.3	28.0	**26.79**	30	57	1.900	16	85	5.313	26	69	2.654
118.3	59.1	39.4	29.6	**25.37**	24	62	2.583	16	85	5.313	33	61	1.848
118.7	59.3	39.6	29.7	**25.28**	26	60	2.308	24	78	3.250	27	91	3.370
119.2	59.6	39.7	29.8	**25.16**	37	52	1.405	16	85	5.313	27	91	3.370
119.9	60.0	40.0	30.0	**25.02**	22	63	2.864	16	85	5.313	45	74	1.644
120.3	60.1	40.1	30.1	**24.94**	15	70	4.667	24	78	3.250	45	74	1.644
121.5	60.7	40.5	30.4	**24.70**	22	63	2.864	24	78	3.250	26	69	2.654
122.2	61.1	40.7	30.5	**24.56**	31	54	1.742	16	85	5.313	26	69	2.654
123.0	61.5	41.0	30.8	**24.38**	17	69	4.059	24	78	3.250	33	61	1.848
130.0	65.0	43.3	32.5	**23.08**	28	59	2.107	24	78	3.250	27	91	3.370
132.4	66.2	44.1	33.1	**22.66**	26	60	2.308	16	85	5.313	33	61	1.848
132.9	66.5	44.3	33.2	**22.57**	24	62	2.583	16	85	5.313	45	74	1.644
133.5	66.8	44.5	33.4	**22.47**	32	51	1.594	16	85	5.313	26	69	2.654
134.6	67.3	44.9	33.7	**22.28**	24	62	2.583	24	78	3.250	26	69	2.654
138.3	69.1	46.1	34.6	**21.69**	17	69	4.059	24	78	3.250	45	74	1.644
139.5	69.8	46.5	34.9	**21.50**	19	68	3.579	24	78	3.250	33	61	1.848
144.1	72.1	48.0	36.0	**20.81**	30	57	1.900	24	78	3.250	27	91	3.370
145.0	72.5	48.3	36.2	**20.69**	28	59	2.107	16	85	5.313	33	61	1.848
148.8	74.4	49.6	37.2	**20.16**	26	60	2.308	16	85	5.313	45	74	1.644
150.7	75.4	50.2	37.7	**19.90**	26	60	2.308	24	78	3.250	26	69	2.654
151.4	75.7	50.5	37.9	**19.81**	37	52	1.405	16	85	5.313	26	69	2.654
156.1	78.0	52.0	39.0	**19.22**	20	64	3.200	24	78	3.250	33	61	1.848
156.8	78.4	52.3	39.2	**19.13**	19	68	3.579	24	78	3.250	45	74	1.644
157.2	78.6	52.4	39.3	**19.08**	31	54	1.742	24	78	3.250	27	91	3.370
160.8	80.4	53.6	40.2	**18.66**	30	57	1.900	16	85	5.313	33	61	1.848
163.0	81.5	54.3	40.7	**18.41**	28	59	2.107	16	85	5.313	45	74	1.644
165.1	82.5	55.0	41.3	**18.17**	28	59	2.107	24	78	3.250	26	69	2.654
171.8	85.9	57.3	43.0	**17.46**	32	51	1.594	24	78	3.250	27	91	3.370
174.4	87.2	58.1	43.6	**17.20**	22	63	2.864	24	78	3.250	33	61	1.848
175.4	87.7	58.5	43.8	**17.11**	31	54	1.742	16	85	5.313	33	61	1.848
175.4	87.7	58.5	43.9	**17.10**	20	64	3.200	24	78	3.250	45	74	1.644
180.7	90.4	60.2	45.2	**16.60**	30	57	1.900	16	85	5.313	45	74	1.644
183.1	91.5	61.0	45.8	**16.39**	30	57	1.900	24	78	3.250	26	69	2.654
190.7	95.4	63.6	47.7	**15.73**	15	70	4.667				27	91	3.370
191.7	95.8	63.9	47.9	**15.65**	32	51	1.594	16	85	5.313	33	61	1.848

193.3	96.7	64.4	48.3	15.52	24	62	2.583	24	78	3.250	33	61	1.848
194.9	97.4	65.0	48.7	15.39	37	52	1.405	24	78	3.250	27	91	3.370
196.0	98.0	65.3	49.0	15.30	22	63	2.864	24	78	3.250	45	74	1.644
197.1	98.6	65.7	49.3	15.22	31	54	1.742	16	85	5.313	45	74	1.644
199.7	99.8	66.6	49.9	15.02	31	54	1.742	24	78	3.250	26	69	2.654
215.5	107.7	71.8	53.9	13.92	32	51	1.594	16	85	5.313	45	74	1.644
216.4	108.2	72.1	54.1	13.86	26	60	2.308	24	78	3.250	33	61	1.848
217.3	108.6	72.4	54.3	13.81	24	62	2.583	24	78	3.250	45	74	1.644
217.4	108.7	72.5	54.3	13.80	37	52	1.405	16	85	5.313	33	61	1.848
218.2	109.1	72.7	54.6	13.75	32	51	1.594	24	78	3.250	26	69	2.654
219.3	109.7	73.1	54.8	13.68	17	69	4.059				27	91	3.370
237.0	118.5	79.0	59.2	12.66	28	59	2.107	24	78	3.250	33	61	1.848
242.2	121.1	80.7	60.6	12.38	15	70	4.667				26	69	2.654
243.2	121.6	81.1	60.8	12.33	26	60	2.308	24	78	3.250	45	74	1.644
244.3	122.2	81.4	61.1	12.28	37	52	1.405	16	85	5.313	45	74	1.644
247.5	123.7	82.5	61.9	12.12	37	52	1.405	24	78	3.250	26	69	2.654
248.7	124.4	82.9	62.2	12.06	19	68	3.579				27	91	3.370
262.8	131.4	87.6	65.7	11.41	30	57	1.900	24	78	3.250	33	61	1.848
266.4	133.2	88.8	66.6	11.26	28	59	2.107	24	78	3.250	45	74	1.644
278.2	139.1	92.7	69.5	10.79	20	64	3.200				27	91	3.370
278.5	139.3	92.8	69.6	10.77	17	69	4.059				26	69	2.654
286.7	143.3	95.6	71.7	10.46	31	54	1.742	24	78	3.250	33	61	1.848
295.4	147.7	98.5	73.9	10.15	30	57	1.900	24	78	3.250	45	74	1.644
310.8	155.4	103.6	77.7	9.65	22	63	2.864				27	91	3.370
313.3	156.7	104.4	78.3	9.57	32	51	1.594	24	78	3.250	33	61	1.848
315.9	157.9	105.3	79.0	9.50	19	68	3.579				26	69	2.654
322.2	161.1	107.4	80.6	9.31	31	54	1.742	24	78	3.250	45	74	1.644
344.6	172.3	114.9	86.1	8.71	24	62	2.583				27	91	3.370
347.8	173.9	115.9	86.9	8.63	15	70	4.667				33	61	1.848
352.2	176.1	117.4	88.1	8.52	32	51	1.594	24	78	3.250	45	74	1.644
353.3	176.6	117.8	88.3	8.49	20	64	3.200				26	69	2.654
355.3	177.7	118.4	88.8	8.44	37	52	1.405	24	78	3.250	33	61	1.848
385.7	192.9	128.6	96.4	7.78	26	60	2.308				27	91	3.370
390.9	195.5	130.3	97.7	7.67	15	70	4.667				45	74	1.644
394.8	197.4	131.6	98.7	7.60	22	63	2.864				26	69	2.654
399.4	199.7	133.1	99.9	7.51	37	52	1.405	24	78	3.250	45	74	1.644
399.9	199.9	133.3	100.0	7.50	17	69	4.059				33	61	1.848
422.4	211.2	140.8	105.6	7.10	28	59	2.107				27	91	3.370
437.6	218.8	145.9	109.4	6.86	24	62	2.583				26	69	2.654
449.5	224.7	149.8	112.4	6.67	17	69	4.059				45	74	1.644
453.5	226.7	151.2	113.4	6.62	19	68	3.579				33	61	1.848
468.5	234.2	156.2	117.1	6.40	30	57	1.900				27	91	3.370
489.9	244.9	163.3	122.5	6.12	26	60	2.308				26	69	2.654
507.2	253.6	169.1	126.8	5.92	20	64	3.200				33	61	1.848
509.7	254.9	169.9	127.4	5.89	19	68	3.579				45	74	1.644
511.0	255.5	170.3	127.7	5.87	31	54	1.742				27	91	3.370
536.5	268.2	178.8	134.1	5.59	28	59	2.107				26	69	2.654
558.5	279.3	186.2	139.6	5.37	32	51	1.594				27	91	3.370
566.7	283.4	188.9	141.7	5.29	22	63	2.864				33	61	1.848
570.1	285.1	190.0	142.5	5.26	20	64	3.200				45	74	1.644
595.0	297.5	198.3	148.7	5.04	30	57	1.900				26	69	2.654
628.2	314.1	209.4	157.1	4.78	24	62	2.583				33	61	1.848
633.3	316.7	211.1	158.3	4.74	37	52	1.405				27	91	3.370
637.1	318.5	212.4	159.3	4.71	22	63	2.864				45	74	1.644
649.0	324.5	216.3	162.2	4.62	31	54	1.742				26	69	2.654
703.3	351.6	234.4	175.8	4.27	26	60	2.308				33	61	1.848
706.2	353.1	235.4	176.5	4.25	24	62	2.583				45	74	1.644
709.3	354.6	236.4	177.3	4.23	32	51	1.594				26	69	2.654
770.2	385.1	256.7	192.6	3.90	28	59	2.107				33	61	1.848
790.5	395.3	263.5	197.6	3.79	26	60	2.308				45	74	1.644
804.3	402.2	268.1	201.1	3.73	37	52	1.405				26	69	2.654
854.2	427.1	284.7	213.5	3.51	30	57	1.900				33	61	1.848
865.8	432.9	288.6	216.4	3.47	28	59	2.107				45	74	1.644
931.7	465.8	310.6	232.9	3.22	31	54	1.742				33	61	1.848
960.2	480.1	320.1	240.0	3.12	30	57	1.900				45	74	1.644
1018.3	509.2	339.4	254.6	2.95	32	51	1.594				33	61	1.848
1047.3	523.6	349.1	261.8	2.86	31	54	1.742				45	74	1.644
1144.7	572.3	381.6	286.2	2.62	32	51	1.594				45	74	1.644
1154.8	577.4	384.9	288.7	2.60	37	52	1.405				33	61	1.848
1298.1	649.0	432.7	324.5	2.31	37	52	1.405				45	74	1.644

ESR425

OUTPUT SPEEDS (NOMINAL)				OUTPUT	FIRST PAIR			SECOND PAIR			THIRD PAIR		
3000	1500	1000	750	RATIO	PINION	WHEEL	RATIO:1	PINION	WHEEL	RATIO:1	PINION	WHEEL	RATIO:1
25.4	12.7	8.5	6.3	**118.31**	18	82	4.556	16	74	4.625	13	73	5.615
25.8	12.9	8.6	6.5	**116.11**	17	76	4.471	16	74	4.625	13	73	5.615
26.9	13.5	9.0	6.7	**111.37**	18	82	4.556	16	74	4.625	14	74	5.286
27.1	13.5	9.0	6.8	**110.72**	19	81	4.263	16	74	4.625	13	73	5.615
27.3	13.7	9.1	6.8	**109.85**	18	82	4.556	17	73	4.294	13	73	5.615
27.4	13.7	9.1	6.9	**109.29**	17	76	4.471	16	74	4.625	14	74	5.286
27.8	13.9	9.3	7.0	**107.80**	17	76	4.471	17	73	4.294	13	73	5.615
28.8	14.4	9.6	7.2	**104.22**	19	81	4.263	16	74	4.625	14	74	5.286
28.9	14.4	9.6	7.2	**103.88**	20	80	4.000	16	74	4.625	13	73	5.615
29.0	14.5	9.7	7.3	**103.40**	18	82	4.556	17	73	4.294	14	74	5.286
29.2	14.6	9.7	7.3	**102.80**	19	81	4.263	17	73	4.294	13	73	5.615
29.6	14.8	9.9	7.4	**101.47**	17	76	4.471	17	73	4.294	14	74	5.286
30.7	15.3	10.2	7.7	**97.79**	20	80	4.000	16	74	4.625	14	74	5.286
31.0	15.5	10.3	7.8	**96.76**	19	81	4.263	17	73	4.294	14	74	5.286
31.1	15.6	10.4	7.8	**96.45**	20	80	4.000	17	73	4.294	13	73	5.615
32.3	16.2	10.8	8.1	**92.75**	21	75	3.571	16	74	4.625	13	73	5.615
33.0	16.5	11.0	8.3	**90.79**	20	80	4.000	17	73	4.294	14	74	5.286
34.4	17.2	11.5	8.6	**87.31**	21	75	3.571	16	74	4.625	14	74	5.286
34.8	17.4	11.6	8.7	**86.18**	22	73	3.318	16	74	4.625	13	73	5.615
34.8	17.4	11.6	8.7	**86.12**	21	75	3.571	17	73	4.294	13	73	5.615
35.9	18.0	12.0	9.0	**83.56**	23	74	3.217	16	74	4.625	13	73	5.615
37.0	18.5	12.3	9.2	**81.12**	22	73	3.318	16	74	4.625	14	74	5.286
37.0	18.5	12.3	9.3	**81.06**	21	75	3.571	17	73	4.294	14	74	5.286
37.5	18.7	12.5	9.4	**80.01**	22	73	3.318	17	73	4.294	13	73	5.615
38.1	19.1	12.7	9.5	**78.65**	23	74	3.217	16	74	4.625	14	74	5.286
38.7	19.3	12.9	9.7	**77.58**	23	74	3.217	17	73	4.294	13	73	5.615
39.0	19.5	13.0	9.8	**76.83**	24	71	2.958	16	74	4.625	13	73	5.615
39.6	19.8	13.2	9.9	**75.84**	25	73	2.920	16	74	4.625	13	73	5.615
39.8	19.9	13.3	10.0	**75.31**	22	73	3.318	17	73	4.294	14	74	5.286
41.1	20.5	13.7	10.3	**73.03**	23	74	3.217	17	73	4.294	14	74	5.286
41.5	20.7	13.8	10.4	**72.32**	24	71	2.958	16	74	4.625	14	74	5.286
42.0	21.0	14.0	10.5	**71.38**	25	73	2.920	16	74	4.625	14	74	5.286
42.1	21.0	14.0	10.5	**71.33**	24	71	2.958	17	73	4.294	13	73	5.615
42.6	21.3	14.2	10.7	**70.41**	25	73	2.920	17	73	4.294	13	73	5.615
42.9	21.5	14.3	10.7	**69.92**	26	70	2.692	16	74	4.625	13	73	5.615
44.7	22.3	14.9	11.2	**67.15**	24	71	2.958	17	73	4.294	14	74	5.286
44.9	22.5	15.0	11.2	**66.78**	28	72	2.571	16	74	4.625	13	73	5.615
45.3	22.6	15.1	11.3	**66.28**	25	73	2.920	17	73	4.294	14	74	5.286
45.6	22.8	15.2	11.4	**65.82**	26	70	2.692	16	74	4.625	14	74	5.286
46.0	23.0	15.3	11.5	**65.21**	18	82	4.556	16	74	4.625	21	65	3.095
46.2	23.1	15.4	11.6	**64.92**	26	70	2.692	17	73	4.294	13	73	5.615
46.5	23.3	15.5	11.6	**64.45**	27	67	2.481	16	74	4.625	13	73	5.615
46.9	23.4	15.6	11.7	**64.00**	17	76	4.471	16	74	4.625	21	65	3.095
47.7	23.9	15.9	11.9	**62.86**	28	72	2.571	16	74	4.625	14	74	5.286
48.4	24.2	16.1	12.1	**62.01**	28	72	2.571	17	73	4.294	13	73	5.615
48.5	24.3	16.2	12.1	**61.79**	29	69	2.379	16	74	4.625	13	73	5.615
49.1	24.5	16.4	12.3	**61.11**	26	70	2.692	17	73	4.294	14	74	5.286
49.2	24.6	16.4	12.3	**61.03**	19	81	4.263	16	74	4.625	21	65	3.095
49.5	24.7	16.5	12.4	**60.66**	27	67	2.481	16	74	4.625	14	74	5.286
49.5	24.8	16.5	12.4	**60.55**	18	82	4.556	17	73	4.294	21	65	3.095
50.1	25.1	16.7	12.5	**59.84**	27	67	2.481	17	73	4.294	13	73	5.615
50.5	25.2	16.8	12.6	**59.42**	17	76	4.471	17	73	4.294	21	65	3.095
51.4	25.7	17.1	12.9	**58.36**	28	72	2.571	17	73	4.294	14	74	5.286
51.6	25.8	17.2	12.9	**58.17**	29	69	2.379	16	74	4.625	14	74	5.286
52.3	26.1	17.4	13.1	**57.37**	29	69	2.379	17	73	4.294	13	73	5.615
52.4	26.2	17.5	13.1	**57.26**	20	80	4.000	16	74	4.625	21	65	3.095
52.9	26.5	17.6	13.2	**56.66**	19	81	4.263	17	73	4.294	21	65	3.095
53.3	26.6	17.8	13.3	**56.32**	27	67	2.481	17	73	4.294	14	74	5.286
54.1	27.1	18.0	13.5	**55.41**	30	64	2.133	16	74	4.625	13	73	5.615
55.6	27.8	18.5	13.9	**54.00**	29	69	2.379	17	73	4.294	14	74	5.286
56.4	28.2	18.8	14.1	**53.17**	20	80	4.000	17	73	4.294	21	65	3.095
57.5	28.8	19.2	14.4	**52.15**	30	64	2.133	16	74	4.625	14	74	5.286
57.8	28.9	19.3	14.4	**51.94**	31	62	2.000	16	74	4.625	13	73	5.615
58.3	29.2	19.4	14.6	**51.44**	30	64	2.133	17	73	4.294	13	73	5.615
58.7	29.3	19.6	14.7	**51.13**	21	75	3.571	16	74	4.625	21	65	3.095
60.4	30.2	20.1	15.1	**49.65**	34	65	1.912	16	74	4.625	13	73	5.615
61.4	30.7	20.5	15.3	**48.89**	31	62	2.000	16	74	4.625	14	74	5.286
62.0	31.0	20.7	15.5	**48.42**	30	64	2.133	17	73	4.294	14	74	5.286
62.2	31.1	20.7	15.6	**48.23**	31	62	2.000	17	73	4.294	13	73	5.615
63.2	31.6	21.1	15.8	**47.50**	22	73	3.318	16	74	4.625	21	65	3.095
63.2	31.6	21.1	15.8	**47.47**	21	75	3.571	17	73	4.294	21	65	3.095
63.7	31.9	21.2	15.9	**47.07**	32	58	1.813	16	74	4.625	13	73	5.615
64.2	32.1	21.4	16.0	**46.74**	34	65	1.912	16	74	4.625	14	74	5.286
65.1	32.5	21.7	16.3	**46.10**	34	65	1.912	17	73	4.294	13	73	5.615

65.1	32.6	21.7	16.3	**46.06**	23	74	3.217	16	74	4.625	21	65	3.095
66.1	33.0	22.0	16.5	**45.39**	31	62	2.000	17	73	4.294	14	74	5.286
67.7	33.9	22.6	16.9	**44.31**	32	58	1.813	16	74	4.625	14	74	5.286
67.8	33.9	22.6	17.0	**44.22**	37	63	1.703	16	74	4.625	13	73	5.615
68.0	34.0	22.7	17.0	**44.10**	22	73	3.318	17	73	4.294	21	65	3.095
68.2	34.1	22.7	17.0	**44.01**	36	61	1.694	16	74	4.625	13	73	5.615
68.6	34.3	22.9	17.2	**43.71**	32	58	1.813	17	73	4.294	13	73	5.615
69.1	34.6	23.0	17.3	**43.39**	34	65	1.912	17	73	4.294	14	74	5.286
70.2	35.1	23.4	17.5	**42.76**	23	74	3.217	17	73	4.294	21	65	3.095
70.8	35.4	23.6	17.7	**42.35**	24	71	2.958	16	74	4.625	21	65	3.095
70.9	35.5	23.6	17.7	**42.30**	35	57	1.629	16	74	4.625	13	73	5.615
71.8	35.9	23.9	17.9	**41.80**	25	73	2.920	16	74	4.625	21	65	3.095
72.1	36.0	24.0	18.0	**41.63**	37	63	1.703	16	74	4.625	14	74	5.286
72.4	36.2	24.1	18.1	**41.42**	36	61	1.694	16	74	4.625	14	74	5.286
72.9	36.5	24.3	18.2	**41.14**	32	58	1.813	17	73	4.294	14	74	5.286
73.1	36.5	24.4	18.3	**41.06**	37	63	1.703	17	73	4.294	13	73	5.615
73.4	36.7	24.5	18.4	**40.86**	36	61	1.694	17	73	4.294	13	73	5.615
75.1	37.5	25.0	18.8	**39.96**	39	60	1.538	16	74	4.625	13	73	5.615
75.4	37.7	25.1	18.8	**39.81**	35	57	1.629	16	74	4.625	14	74	5.286
76.3	38.1	25.4	19.1	**39.33**	18	82	4.556	16	74	4.625	30	56	1.867
76.3	38.1	25.4	19.1	**39.32**	24	71	2.958	17	73	4.294	21	65	3.095
76.4	38.2	25.5	19.1	**39.27**	35	57	1.629	17	73	4.294	13	73	5.615
77.3	38.6	25.8	19.3	**38.81**	25	73	2.920	17	73	4.294	21	65	3.095
77.6	38.8	25.9	19.4	**38.65**	37	63	1.703	17	73	4.294	14	74	5.286
77.7	38.9	25.9	19.4	**38.60**	17	76	4.471	16	74	4.625	30	56	1.867
77.8	38.9	25.9	19.5	**38.54**	26	70	2.692	16	74	4.625	21	65	3.095
78.0	39.0	26.0	19.5	**38.46**	36	61	1.694	17	73	4.294	14	74	5.286
79.8	39.9	26.6	19.9	**37.61**	39	60	1.538	16	74	4.625	14	74	5.286
80.9	40.4	27.0	20.2	**37.10**	39	60	1.538	17	73	4.294	13	73	5.615
81.2	40.6	27.1	20.3	**36.96**	35	57	1.629	17	73	4.294	14	74	5.286
81.5	40.7	27.2	20.4	**36.81**	28	72	2.571	16	74	4.625	21	65	3.095
81.5	40.8	27.2	20.4	**36.81**	19	81	4.263	16	74	4.625	30	56	1.867
82.2	41.1	27.4	20.5	**36.52**	18	82	4.556	17	73	4.294	30	56	1.867
82.5	41.3	27.5	20.6	**36.36**	40	56	1.400	16	74	4.625	13	73	5.615
83.7	41.9	27.9	20.9	**35.83**	17	76	4.471	17	73	4.294	30	56	1.867
83.8	41.9	27.9	21.0	**35.78**	26	70	2.692	17	73	4.294	21	65	3.095
84.5	42.2	28.2	21.1	**35.52**	27	67	2.481	16	74	4.625	21	65	3.095
85.1	42.6	28.4	21.3	**35.25**	42	57	1.357	16	74	4.625	13	73	5.615
85.9	43.0	28.6	21.5	**34.92**	39	60	1.538	17	73	4.294	14	74	5.286
86.9	43.4	29.0	21.7	**34.53**	20	80	4.000	16	74	4.625	30	56	1.867
87.7	43.8	29.2	21.9	**34.23**	40	56	1.400	16	74	4.625	14	74	5.286
87.8	43.9	29.3	21.9	**34.18**	28	72	2.571	17	73	4.294	21	65	3.095
87.8	43.9	29.3	21.9	**34.17**	19	81	4.263	17	73	4.294	30	56	1.867
88.1	44.0	29.4	22.0	**34.06**	29	69	2.379	16	74	4.625	21	65	3.095
88.9	44.4	29.6	22.2	**33.76**	40	56	1.400	17	73	4.294	13	73	5.615
90.4	45.2	30.1	22.6	**33.18**	42	57	1.357	16	74	4.625	14	74	5.286
91.0	45.5	30.3	22.7	**32.98**	27	67	2.481	17	73	4.294	21	65	3.095
91.1	45.5	30.4	22.8	**32.94**	41	52	1.268	16	74	4.625	13	73	5.615
91.7	45.8	30.6	22.9	**32.72**	42	57	1.357	17	73	4.294	13	73	5.615
93.6	46.8	31.2	23.4	**32.06**	20	80	4.000	17	73	4.294	30	56	1.867
93.7	46.9	31.2	23.4	**32.01**	43	53	1.233	16	74	4.625	13	73	5.615
94.4	47.2	31.5	23.6	**31.78**	40	56	1.400	17	73	4.294	14	74	5.286
94.9	47.4	31.6	23.7	**31.62**	29	69	2.379	17	73	4.294	21	65	3.095
96.8	48.4	32.3	24.2	**31.01**	41	52	1.268	16	74	4.625	14	74	5.286
97.3	48.6	32.4	24.3	**30.83**	21	75	3.571	16	74	4.625	30	56	1.867
97.4	48.7	32.5	24.3	**30.80**	42	57	1.357	17	73	4.294	14	74	5.286
98.1	49.0	32.7	24.5	**30.58**	41	52	1.268	17	73	4.294	13	73	5.615
98.2	49.1	32.7	24.6	**30.54**	30	64	2.133	16	74	4.625	21	65	3.095
99.6	49.8	33.2	24.9	**30.13**	43	53	1.233	16	74	4.625	14	74	5.286
100.9	50.5	33.6	25.2	**29.72**	43	53	1.233	17	73	4.294	13	73	5.615
104.2	52.1	34.7	26.1	**28.79**	41	52	1.268	17	73	4.294	14	74	5.286
104.7	52.4	34.9	26.2	**28.65**	22	73	3.318	16	74	4.625	30	56	1.867
104.8	52.4	34.9	26.2	**28.63**	31	62	2.000	16	74	4.625	21	65	3.095
104.8	52.4	34.9	26.2	**28.63**	21	75	3.571	17	73	4.294	30	56	1.867
105.8	52.9	35.3	26.5	**28.35**	30	64	2.133	17	73	4.294	21	65	3.095
107.2	53.6	35.7	26.8	**27.98**	43	53	1.233	17	73	4.294	14	74	5.286
108.0	54.0	36.0	27.0	**27.78**	23	74	3.217	16	74	4.625	30	56	1.867
109.6	54.8	36.5	27.4	**27.37**	34	65	1.912	16	74	4.625	21	65	3.095
112.8	56.4	37.6	28.2	**26.60**	22	73	3.318	17	73	4.294	30	56	1.867
112.9	56.4	37.6	28.2	**26.58**	31	62	2.000	17	73	4.294	21	65	3.095
115.6	57.8	38.5	28.9	**25.95**	32	58	1.813	16	74	4.625	21	65	3.095
116.3	58.2	38.8	29.1	**25.79**	23	74	3.217	17	73	4.294	30	56	1.867
117.3	58.6	39.1	29.3	**25.58**	18	82	4.556				13	73	5.615
117.5	58.7	39.2	29.4	**25.54**	24	71	2.958	16	74	4.625	30	56	1.867
118.1	59.0	39.4	29.5	**25.41**	34	65	1.912	17	73	4.294	21	65	3.095
119.0	59.5	39.7	29.8	**25.21**	25	73	2.920	16	74	4.625	30	56	1.867

119.5	59.8	39.8	29.9	**25.10**	17	76	4.471				13	73	5.615
123.1	61.5	41.0	30.8	**24.38**	37	63	1.703	16	74	4.625	21	65	3.095
123.7	61.8	41.2	30.9	**24.26**	36	61	1.694	16	74	4.625	21	65	3.095
124.5	62.3	41.5	31.1	**24.09**	32	58	1.813	17	73	4.294	21	65	3.095
124.6	62.3	41.5	31.1	**24.08**	18	82	4.556				14	74	5.286
125.3	62.7	41.8	31.3	**23.94**	19	81	4.263				13	73	5.615
126.5	63.3	42.2	31.6	**23.71**	24	71	2.958	17	73	4.294	30	56	1.867
127.0	63.5	42.3	31.7	**23.63**	17	76	4.471				14	74	5.286
128.2	64.1	42.7	32.0	**23.41**	25	73	2.920	17	73	4.294	30	56	1.867
128.7	64.3	42.9	32.2	**23.31**	35	57	1.629	16	74	4.625	21	65	3.095
129.1	64.5	43.0	32.3	**23.24**	26	70	2.692	16	74	4.625	30	56	1.867
132.6	66.3	44.2	33.1	**22.63**	37	63	1.703	17	73	4.294	21	65	3.095
133.1	66.6	44.4	33.3	**22.53**	19	81	4.263				14	74	5.286
133.2	66.6	44.4	33.3	**22.52**	36	61	1.694	17	73	4.294	21	65	3.095
133.6	66.8	44.5	33.4	**22.46**	20	80	4.000				13	73	5.615
135.1	67.6	45.0	33.8	**22.20**	28	72	2.571	16	74	4.625	30	56	1.867
136.2	68.1	45.4	34.1	**22.02**	39	60	1.538	16	74	4.625	21	65	3.095
138.6	69.3	46.2	34.6	**21.65**	35	57	1.629	17	73	4.294	21	65	3.095
139.0	69.5	46.3	34.8	**21.58**	26	70	2.692	17	73	4.294	30	56	1.867
140.0	70.0	46.7	35.0	**21.42**	27	67	2.481	16	74	4.625	30	56	1.867
141.9	70.9	47.3	35.5	**21.14**	20	80	4.000				14	74	5.286
145.5	72.8	48.5	36.4	**20.61**	28	72	2.571	17	73	4.294	30	56	1.867
146.0	73.0	48.7	36.5	**20.54**	29	69	2.379	16	74	4.625	30	56	1.867
146.7	73.4	48.9	36.7	**20.45**	39	60	1.538	17	73	4.294	21	65	3.095
149.6	74.8	49.9	37.4	**20.05**	21	75	3.571				13	73	5.615
149.7	74.8	49.9	37.4	**20.04**	40	56	1.400	16	74	4.625	21	65	3.095
150.8	75.4	50.3	37.7	**19.89**	27	67	2.481	17	73	4.294	30	56	1.867
154.4	77.2	51.5	38.6	**19.43**	42	57	1.357	16	74	4.625	21	65	3.095
157.3	78.7	52.4	39.3	**19.07**	29	69	2.379	17	73	4.294	30	56	1.867
158.9	79.5	53.0	39.7	**18.88**	21	75	3.571				14	74	5.286
161.0	80.5	53.7	40.3	**18.63**	22	73	3.318				13	73	5.615
161.2	80.6	53.7	40.3	**18.61**	40	56	1.400	17	73	4.294	21	65	3.095
162.9	81.4	54.3	40.7	**18.42**	30	64	2.133	16	74	4.625	30	56	1.867
165.2	82.6	55.1	41.3	**18.16**	41	52	1.268	16	74	4.625	21	65	3.095
166.0	83.0	55.3	41.5	**18.07**	23	74	3.217				13	73	5.615
166.3	83.2	55.4	41.6	**18.04**	42	57	1.357	17	73	4.294	21	65	3.095
170.0	85.0	56.7	42.5	**17.64**	43	53	1.233	16	74	4.625	21	65	3.095
171.0	85.5	57.0	42.8	**17.54**	22	73	3.318				14	74	5.286
173.7	86.9	57.9	43.4	**17.27**	31	62	2.000	16	74	4.625	30	56	1.867
175.4	87.7	58.5	43.9	**17.10**	30	64	2.133	17	73	4.294	30	56	1.867
176.4	88.2	58.8	44.1	**17.01**	23	74	3.217				14	74	5.286
178.0	89.0	59.3	44.5	**16.86**	41	52	1.268	17	73	4.294	21	65	3.095
180.6	90.3	60.2	45.1	**16.61**	24	71	2.958				13	73	5.615
181.8	90.9	60.6	45.4	**16.50**	34	65	1.912	16	74	4.625	30	56	1.867
183.0	91.5	61.0	45.7	**16.40**	25	73	2.920				13	73	5.615
183.1	91.6	61.0	45.8	**16.38**	43	53	1.233	17	73	4.294	21	65	3.095
187.1	93.6	62.4	46.8	**16.03**	31	62	2.000	17	73	4.294	30	56	1.867
191.7	95.9	63.9	47.9	**15.65**	32	58	1.813	16	74	4.625	30	56	1.867
191.9	95.9	64.0	48.0	**15.64**	24	71	2.958				14	74	5.286
194.4	97.2	64.8	48.6	**15.43**	25	73	2.920				14	74	5.286
195.8	97.9	65.3	48.9	**15.32**	34	65	1.912	17	73	4.294	30	56	1.867
198.4	99.2	66.1	49.6	**15.12**	26	70	2.692				13	73	5.615
204.1	102.0	68.0	51.0	**14.70**	37	63	1.703	16	74	4.625	30	56	1.867
205.1	102.5	68.4	51.3	**14.63**	36	61	1.694	16	74	4.625	30	56	1.867
206.5	103.2	68.8	51.6	**14.53**	32	58	1.813	17	73	4.294	30	56	1.867
207.8	103.9	69.3	51.9	**14.44**	28	72	2.571				13	73	5.615
210.8	105.4	70.3	52.7	**14.23**	26	70	2.692				14	74	5.286
212.8	106.4	70.9	53.2	**14.10**	18	82	4.556				21	65	3.095
213.4	106.7	71.1	53.3	**14.06**	35	57	1.629	16	74	4.625	30	56	1.867
215.3	107.6	71.8	53.8	**13.93**	27	67	2.481				13	73	5.615
216.8	108.4	72.3	54.2	**13.84**	17	76	4.471				21	65	3.095
219.8	109.9	73.3	55.0	**13.65**	37	63	1.703	17	73	4.294	30	56	1.867
220.7	110.4	73.6	55.2	**13.59**	28	72	2.571				14	74	5.286
220.9	110.4	73.6	55.2	**13.58**	36	61	1.694	17	73	4.294	30	56	1.867
224.5	112.3	74.8	56.1	**13.36**	29	69	2.379				13	73	5.615
225.9	112.9	75.3	56.5	**13.28**	39	60	1.538	16	74	4.625	30	56	1.867
227.4	113.7	75.8	56.8	**13.20**	19	81	4.263				21	65	3.095
228.7	114.4	76.2	57.2	**13.12**	27	67	2.481				14	74	5.286
229.8	114.9	76.6	57.5	**13.05**	35	57	1.629	17	73	4.294	30	56	1.867
238.5	119.3	79.5	59.6	**12.58**	29	69	2.379				14	74	5.286
242.3	121.2	80.8	60.6	**12.38**	20	80	4.000				21	65	3.095
243.3	121.6	81.1	60.8	**12.33**	39	60	1.538	17	73	4.294	30	56	1.867
248.2	124.1	82.7	62.1	**12.09**	40	56	1.400	16	74	4.625	30	56	1.867
250.4	125.2	83.5	62.6	**11.98**	30	64	2.133				13	73	5.615
256.0	128.0	85.3	64.0	**11.72**	42	57	1.357	16	74	4.625	30	56	1.867
266.0	133.0	88.7	66.5	**11.28**	30	64	2.133				14	74	5.286

267.1	133.6	89.0	66.8	**11.23**	31	62	2.000				13	73	5.615
267.3	133.7	89.1	66.8	**11.22**	40	56	1.400	17	73	4.294	30	56	1.867
271.4	135.7	90.5	67.8	**11.05**	21	75	3.571				21	65	3.095
274.0	137.0	91.3	68.5	**10.95**	41	52	1.268	16	74	4.625	30	56	1.867
275.8	137.9	91.9	68.9	**10.88**	42	57	1.357	17	73	4.294	30	56	1.867
279.5	139.7	93.2	69.9	**10.74**	34	65	1.912				13	73	5.615
281.9	141.0	94.0	70.5	**10.64**	43	53	1.233	16	74	4.625	30	56	1.867
283.8	141.9	94.6	70.9	**10.57**	31	62	2.000				14	74	5.286
292.1	146.0	97.4	73.0	**10.27**	22	73	3.318				21	65	3.095
294.8	147.4	98.3	73.7	**10.18**	32	58	1.813				13	73	5.615
295.1	147.5	98.4	73.8	**10.17**	41	52	1.268	17	73	4.294	30	56	1.867
296.9	148.4	99.0	74.2	**10.11**	34	65	1.912				14	74	5.286
301.2	150.6	100.4	75.3	**9.96**	23	74	3.217				21	65	3.095
303.6	151.8	101.2	75.9	**9.88**	43	53	1.233	17	73	4.294	30	56	1.867
313.1	156.6	104.4	78.3	**9.58**	32	58	1.813				14	74	5.286
313.8	156.9	104.6	78.4	**9.56**	37	63	1.703				13	73	5.615
315.3	157.6	105.1	78.8	**9.51**	36	61	1.694				13	73	5.615
327.6	163.8	109.2	81.9	**9.16**	24	71	2.958				21	65	3.095
328.0	164.0	109.3	82.0	**9.15**	35	57	1.629				13	73	5.615
331.9	166.0	110.6	83.0	**9.04**	25	73	2.920				21	65	3.095
333.3	166.7	111.1	83.3	**9.00**	37	63	1.703				14	74	5.286
335.0	167.5	111.7	83.7	**8.96**	36	61	1.694				14	74	5.286
347.3	173.6	115.8	86.8	**8.64**	39	60	1.538				13	73	5.615
348.5	174.3	116.2	87.1	**8.61**	35	57	1.629				14	74	5.286
352.8	176.4	117.6	88.2	**8.50**	18	82	4.556				30	56	1.867
359.5	179.7	119.8	89.9	**8.35**	17	76	4.471				30	56	1.867
360.0	180.0	120.0	90.0	**8.33**	26	70	2.692				21	65	3.095
368.9	184.5	123.0	92.2	**8.13**	39	60	1.538				14	74	5.286
376.9	188.5	125.6	94.2	**7.96**	28	72	2.571				21	65	3.095
377.0	188.5	125.7	94.2	**7.96**	19	81	4.263				30	56	1.867
381.6	190.8	127.2	95.4	**7.86**	40	56	1.400				13	73	5.615
390.6	195.3	130.2	97.6	**7.68**	27	67	2.481				21	65	3.095
393.7	196.8	131.2	98.4	**7.62**	42	57	1.357				13	73	5.615
401.8	200.9	133.9	100.4	**7.47**	20	80	4.000				30	56	1.867
405.4	202.7	135.1	101.4	**7.40**	40	56	1.400				14	74	5.286
407.4	203.7	135.8	101.8	**7.36**	29	69	2.379				21	65	3.095
418.2	209.1	139.4	104.6	**7.17**	42	57	1.357				14	74	5.286
421.2	210.6	140.4	105.3	**7.12**	41	52	1.268				13	73	5.615
433.4	216.7	144.5	108.4	**6.92**	43	53	1.233				13	73	5.615
447.5	223.8	149.2	111.9	**6.70**	41	52	1.268				14	74	5.286
450.0	225.0	150.0	112.5	**6.67**	21	75	3.571				30	56	1.867
454.3	227.2	151.4	113.6	**6.60**	30	64	2.133				21	65	3.095
460.5	230.2	153.5	115.1	**6.51**	43	53	1.233				14	74	5.286
484.3	242.2	161.4	121.1	**6.19**	22	73	3.318				30	56	1.867
484.6	242.3	161.5	121.2	**6.19**	31	62	2.000				21	65	3.095
499.5	249.8	166.5	124.9	**6.01**	23	74	3.217				30	56	1.867
507.0	253.5	169.0	126.7	**5.92**	34	65	1.912				21	65	3.095
534.7	267.4	178.2	133.7	**5.61**	32	58	1.813				21	65	3.095
543.3	271.6	181.1	135.8	**5.52**	24	71	2.958				30	56	1.867
550.4	275.2	183.5	137.6	**5.45**	25	73	2.920				30	56	1.867
569.2	284.6	189.7	142.3	**5.27**	37	63	1.703				21	65	3.095
572.0	286.0	190.7	143.0	**5.24**	36	61	1.694				21	65	3.095
595.1	297.6	198.4	148.8	**5.04**	35	57	1.629				21	65	3.095
596.9	298.5	199.0	149.2	**5.03**	26	70	2.692				30	56	1.867
625.0	312.5	208.3	156.3	**4.80**	28	72	2.571				30	56	1.867
630.0	315.0	210.0	157.5	**4.76**	39	60	1.538				21	65	3.095
647.7	323.8	215.9	161.9	**4.63**	27	67	2.481				30	56	1.867
675.5	337.7	225.2	168.9	**4.44**	29	69	2.379				30	56	1.867
692.3	346.2	230.8	173.1	**4.33**	40	56	1.400				21	65	3.095
714.2	357.1	238.1	178.5	**4.20**	42	57	1.357				21	65	3.095
753.3	376.7	251.1	188.3	**3.98**	30	64	2.133				30	56	1.867
764.2	382.1	254.7	191.1	**3.93**	41	52	1.268				21	65	3.095
786.4	393.2	262.1	196.6	**3.82**	43	53	1.233				21	65	3.095
803.6	401.8	267.9	200.9	**3.73**	31	62	2.000				30	56	1.867
840.7	420.3	280.2	210.2	**3.57**	34	65	1.912				30	56	1.867
886.7	443.3	295.6	221.7	**3.38**	32	58	1.813				30	56	1.867
943.9	471.9	314.6	236.0	**3.18**	37	63	1.703				30	56	1.867
948.5	474.2	316.2	237.1	**3.16**	36	61	1.694				30	56	1.867
986.8	493.4	328.9	246.7	**3.04**	35	57	1.629				30	56	1.867
1044.6	522.3	348.2	261.2	**2.87**	39	60	1.538				30	56	1.867
1148.0	574.0	382.7	287.0	**2.61**	40	56	1.400				30	56	1.867
1184.2	592.1	394.7	296.1	**2.53**	42	57	1.357				30	56	1.867
1267.2	633.6	422.4	316.8	**2.37**	41	52	1.268				30	56	1.867
1303.9	652.0	434.6	326.0	**2.30**	43	53	1.233				30	56	1.867

ESR45

OUTPUT SPEEDS (NOMINAL)				OUTPUT	FIRST PAIR			SECOND PAIR			THIRD PAIR		
3000	1500	1000	750	RATIO	PINION	WHEEL	RATIO:1	PINION	WHEEL	RATIO:1	PINION	WHEEL	RATIO:1
25.4	12.7	8.5	6.3	**118.31**	18	82	4.556	16	74	4.625	13	73	5.615
25.8	12.9	8.6	6.5	**116.11**	17	76	4.471	16	74	4.625	13	73	5.615
27.1	13.5	9.0	6.8	**110.72**	19	81	4.263	16	74	4.625	13	73	5.615
27.3	13.7	9.1	6.8	**109.85**	18	82	4.556	17	73	4.294	13	73	5.615
28.2	14.1	9.4	7.1	**106.34**	17	76	4.471	16	74	4.625	14	72	5.143
27.7	13.8	9.2	6.9	**108.36**	18	82	4.556	16	74	4.625	14	72	5.143
27.8	13.9	9.3	7.0	**107.80**	17	76	4.471	17	73	4.294	13	73	5.615
29.6	14.8	9.9	7.4	**101.40**	19	81	4.263	16	74	4.625	14	72	5.143
28.9	14.4	9.6	7.2	**103.88**	20	80	4.000	16	74	4.625	13	73	5.615
29.2	14.6	9.7	7.3	**102.80**	19	81	4.263	17	73	4.294	13	73	5.615
29.8	14.9	9.9	7.5	**100.61**	18	82	4.556	17	73	4.294	14	72	5.143
30.4	15.2	10.1	7.6	**98.73**	17	76	4.471	17	73	4.294	14	72	5.143
31.1	15.6	10.4	7.8	**96.45**	20	80	4.000	17	73	4.294	13	73	5.615
31.5	15.8	10.5	7.9	**95.14**	20	80	4.000	16	74	4.625	14	72	5.143
31.9	15.9	10.6	8.0	**94.15**	19	81	4.263	17	73	4.294	14	72	5.143
32.3	16.2	10.8	8.1	**92.75**	21	75	3.571	16	74	4.625	13	73	5.615
34.0	17.0	11.3	8.5	**88.34**	20	80	4.000	17	73	4.294	14	72	5.143
34.8	17.4	11.6	8.7	**86.18**	22	73	3.318	16	74	4.625	13	73	5.615
34.8	17.4	11.6	8.7	**86.12**	21	75	3.571	17	73	4.294	13	73	5.615
35.3	17.7	11.8	8.8	**84.95**	21	75	3.571	16	74	4.625	14	72	5.143
35.9	18.0	12.0	9.0	**83.56**	23	74	3.217	16	74	4.625	13	73	5.615
37.5	18.7	12.5	9.4	**80.01**	22	73	3.318	17	73	4.294	13	73	5.615
38.0	19.0	12.7	9.5	**78.93**	22	73	3.318	16	74	4.625	14	72	5.143
38.0	19.0	12.7	9.5	**78.87**	21	75	3.571	17	73	4.294	14	72	5.143
39.2	19.6	13.1	9.8	**76.53**	23	74	3.217	16	74	4.625	14	72	5.143
38.7	19.3	12.9	9.7	**77.58**	23	74	3.217	17	73	4.294	13	73	5.615
39.0	19.5	13.0	9.8	**76.83**	24	71	2.958	16	74	4.625	13	73	5.615
39.6	19.8	13.2	9.9	**75.84**	25	73	2.920	16	74	4.625	13	73	5.615
40.9	20.5	13.6	10.2	**73.28**	22	73	3.318	17	73	4.294	14	72	5.143
42.1	21.0	14.0	10.5	**71.33**	24	71	2.958	17	73	4.294	13	73	5.615
42.2	21.1	14.1	10.6	**71.05**	23	74	3.217	17	73	4.294	14	72	5.143
42.6	21.3	14.2	10.7	**70.41**	25	73	2.920	17	73	4.294	13	73	5.615
42.6	21.3	14.2	10.7	**70.37**	24	71	2.958	16	74	4.625	14	72	5.143
42.9	21.5	14.3	10.7	**69.92**	26	70	2.692	16	74	4.625	13	73	5.615
43.2	21.6	14.4	10.8	**69.45**	25	73	2.920	16	74	4.625	14	72	5.143
44.9	22.5	15.0	11.2	**66.78**	28	72	2.571	16	74	4.625	13	73	5.615
45.9	23.0	15.3	11.5	**65.33**	24	71	2.958	17	73	4.294	14	72	5.143
46.0	23.0	15.3	11.5	**65.21**	18	82	4.556	16	74	4.625	21	65	3.095
46.2	23.1	15.4	11.6	**64.92**	26	70	2.692	17	73	4.294	13	73	5.615
46.5	23.3	15.5	11.6	**64.49**	25	73	2.920	17	73	4.294	14	72	5.143
46.5	23.3	15.5	11.6	**64.45**	27	67	2.481	16	74	4.625	13	73	5.615
46.8	23.4	15.6	11.7	**64.04**	26	70	2.692	16	74	4.625	14	72	5.143
46.9	23.4	15.6	11.7	**64.00**	17	76	4.471	16	74	4.625	21	65	3.095
48.4	24.2	16.1	12.1	**62.01**	28	72	2.571	17	73	4.294	13	73	5.615
48.5	24.3	16.2	12.1	**61.79**	29	69	2.379	16	74	4.625	13	73	5.615
49.0	24.5	16.3	12.3	**61.16**	28	72	2.571	16	74	4.625	14	72	5.143
49.2	24.6	16.4	12.3	**61.03**	19	81	4.263	16	74	4.625	21	65	3.095
49.5	24.8	16.5	12.4	**60.55**	18	82	4.556	17	73	4.294	21	65	3.095
50.1	25.1	16.7	12.5	**59.84**	27	67	2.481	17	73	4.294	13	73	5.615
50.5	25.2	16.8	12.6	**59.46**	26	70	2.692	17	73	4.294	14	72	5.143
50.8	25.4	16.9	12.7	**59.02**	27	67	2.481	16	74	4.625	14	72	5.143
50.5	25.2	16.8	12.6	**59.42**	17	76	4.471	17	73	4.294	21	65	3.095
52.3	26.1	17.4	13.1	**57.37**	29	69	2.379	17	73	4.294	13	73	5.615
52.4	26.2	17.5	13.1	**57.26**	20	80	4.000	16	74	4.625	21	65	3.095
52.8	26.4	17.6	13.2	**56.79**	28	72	2.571	17	73	4.294	14	72	5.143
52.9	26.5	17.6	13.2	**56.66**	19	81	4.263	17	73	4.294	21	65	3.095
53.0	26.5	17.7	13.3	**56.59**	29	69	2.379	16	74	4.625	14	72	5.143
54.1	27.1	18.0	13.5	**55.41**	30	64	2.133	16	74	4.625	13	73	5.615
54.7	27.4	18.2	13.7	**54.80**	27	67	2.481	17	73	4.294	14	72	5.143
56.4	28.2	18.8	14.1	**53.17**	20	80	4.000	17	73	4.294	21	65	3.095
57.1	28.5	19.0	14.3	**52.54**	29	69	2.379	17	73	4.294	14	72	5.143
57.8	28.9	19.3	14.4	**51.94**	31	62	2.000	16	74	4.625	13	73	5.615
58.3	29.2	19.4	14.6	**51.44**	30	64	2.133	17	73	4.294	13	73	5.615
58.7	29.3	19.6	14.7	**51.13**	21	75	3.571	16	74	4.625	21	65	3.095
59.1	29.6	19.7	14.8	**50.74**	30	64	2.133	16	74	4.625	14	72	5.143
60.4	30.2	20.1	15.1	**49.65**	34	65	1.912	16	74	4.625	13	73	5.615
62.2	31.1	20.7	15.6	**48.23**	31	62	2.000	17	73	4.294	13	73	5.615
63.1	31.5	21.0	15.8	**47.57**	31	62	2.000	16	74	4.625	14	72	5.143
63.2	31.6	21.1	15.8	**47.50**	22	73	3.318	16	74	4.625	21	65	3.095
63.2	31.6	21.1	15.8	**47.47**	21	75	3.571	17	73	4.294	21	65	3.095
63.7	31.8	21.2	15.9	**47.11**	30	64	2.133	17	73	4.294	14	72	5.143
63.7	31.9	21.2	15.9	**47.07**	32	58	1.813	16	74	4.625	13	73	5.615
66.0	33.0	22.0	16.5	**45.47**	34	65	1.912	16	74	4.625	14	72	5.143
65.1	32.5	21.7	16.3	**46.10**	34	65	1.912	17	73	4.294	13	73	5.615

65.1	32.6	21.7	16.3	**46.06**	23	74	3.217	16	74	4.625	21	65	3.095
67.8	33.9	22.6	17.0	**44.22**	37	63	1.703	16	74	4.625	13	73	5.615
67.9	34.0	22.6	17.0	**44.17**	31	62	2.000	17	73	4.294	14	72	5.143
68.0	34.0	22.7	17.0	**44.10**	22	73	3.318	17	73	4.294	21	65	3.095
68.2	34.1	22.7	17.0	**44.01**	36	61	1.694	16	74	4.625	13	73	5.615
68.6	34.3	22.9	17.2	**43.71**	32	58	1.813	17	73	4.294	13	73	5.615
69.6	34.8	23.2	17.4	**43.11**	32	58	1.813	16	74	4.625	14	72	5.143
70.2	35.1	23.4	17.5	**42.76**	23	74	3.217	17	73	4.294	21	65	3.095
70.8	35.4	23.6	17.7	**42.35**	24	71	2.958	16	74	4.625	21	65	3.095
70.9	35.5	23.6	17.7	**42.30**	35	57	1.629	16	74	4.625	13	73	5.615
71.1	35.5	23.7	17.8	**42.22**	34	65	1.912	17	73	4.294	14	72	5.143
71.8	35.9	23.9	17.9	**41.80**	25	73	2.920	16	74	4.625	21	65	3.095
73.1	36.5	24.4	18.3	**41.06**	37	63	1.703	17	73	4.294	13	73	5.615
73.4	36.7	24.5	18.4	**40.86**	36	61	1.694	17	73	4.294	13	73	5.615
74.1	37.0	24.7	18.5	**40.50**	37	63	1.703	16	74	4.625	14	72	5.143
74.4	37.2	24.8	18.6	**40.30**	36	61	1.694	16	74	4.625	14	72	5.143
74.9	37.5	25.0	18.7	**40.03**	32	58	1.813	17	73	4.294	14	72	5.143
75.1	37.5	25.0	18.8	**39.96**	39	60	1.538	16	74	4.625	13	73	5.615
76.3	38.1	25.4	19.1	**39.33**	18	82	4.556	16	74	4.625	30	56	1.867
76.3	38.1	25.4	19.1	**39.32**	24	71	2.958	17	73	4.294	21	65	3.095
76.4	38.2	25.5	19.1	**39.27**	35	57	1.629	17	73	4.294	13	73	5.615
77.3	38.6	25.8	19.3	**38.81**	25	73	2.920	17	73	4.294	21	65	3.095
77.4	38.7	25.8	19.4	**38.74**	35	57	1.629	16	74	4.625	14	72	5.143
77.7	38.9	25.9	19.4	**38.60**	17	76	4.471	16	74	4.625	30	56	1.867
77.8	38.9	25.9	19.5	**38.54**	26	70	2.692	16	74	4.625	21	65	3.095
79.8	39.9	26.6	19.9	**37.60**	37	63	1.703	17	73	4.294	14	72	5.143
80.2	40.1	26.7	20.0	**37.42**	36	61	1.694	17	73	4.294	14	72	5.143
80.9	40.4	27.0	20.2	**37.10**	39	60	1.538	17	73	4.294	13	73	5.615
82.0	41.0	27.3	20.5	**36.59**	39	60	1.538	16	74	4.625	14	72	5.143
81.5	40.7	27.2	20.4	**36.81**	28	72	2.571	16	74	4.625	21	65	3.095
81.5	40.8	27.2	20.4	**36.81**	19	81	4.263	16	74	4.625	30	56	1.867
83.4	41.7	27.8	20.9	**35.97**	35	57	1.629	17	73	4.294	14	72	5.143
82.2	41.1	27.4	20.5	**36.52**	18	82	4.556	17	73	4.294	30	56	1.867
82.5	41.3	27.5	20.6	**36.36**	40	56	1.400	16	74	4.625	13	73	5.615
83.7	41.9	27.9	20.9	**35.83**	17	76	4.471	17	73	4.294	30	56	1.867
83.8	41.9	27.9	21.0	**35.78**	26	70	2.692	17	73	4.294	21	65	3.095
84.5	42.2	28.2	21.1	**35.52**	27	67	2.481	16	74	4.625	21	65	3.095
85.1	42.6	28.4	21.3	**35.25**	42	57	1.357	16	74	4.625	13	73	5.615
86.9	43.4	29.0	21.7	**34.53**	20	80	4.000	16	74	4.625	30	56	1.867
90.1	45.0	30.0	22.5	**33.30**	40	56	1.400	16	74	4.625	14	72	5.143
87.8	43.9	29.3	21.9	**34.18**	28	72	2.571	17	73	4.294	21	65	3.095
87.8	43.9	29.3	21.9	**34.17**	19	81	4.263	17	73	4.294	30	56	1.867
88.1	44.0	29.4	22.0	**34.06**	29	69	2.379	16	74	4.625	21	65	3.095
88.3	44.1	29.4	22.1	**33.98**	39	60	1.538	17	73	4.294	14	72	5.143
88.9	44.4	29.6	22.2	**33.76**	40	56	1.400	17	73	4.294	13	73	5.615
91.0	45.5	30.3	22.7	**32.98**	27	67	2.481	17	73	4.294	21	65	3.095
91.1	45.5	30.4	22.8	**32.94**	41	52	1.268	16	74	4.625	13	73	5.615
91.7	45.8	30.6	22.9	**32.72**	42	57	1.357	17	73	4.294	13	73	5.615
92.9	46.5	31.0	23.2	**32.28**	42	57	1.357	16	74	4.625	14	72	5.143
93.6	46.8	31.2	23.4	**32.06**	20	80	4.000	17	73	4.294	30	56	1.867
93.7	46.9	31.2	23.4	**32.01**	43	53	1.233	16	74	4.625	13	73	5.615
94.9	47.4	31.6	23.7	**31.62**	29	69	2.379	17	73	4.294	21	65	3.095
99.4	49.7	33.1	24.9	**30.17**	41	52	1.268	16	74	4.625	14	72	5.143
97.0	48.5	32.3	24.3	**30.92**	40	56	1.400	17	73	4.294	14	72	5.143
97.3	48.6	32.4	24.3	**30.83**	21	75	3.571	16	74	4.625	30	56	1.867
98.1	49.0	32.7	24.5	**30.58**	41	52	1.268	17	73	4.294	13	73	5.615
98.2	49.1	32.7	24.6	**30.54**	30	64	2.133	16	74	4.625	21	65	3.095
100.1	50.0	33.4	25.0	**29.97**	42	57	1.357	17	73	4.294	14	72	5.143
100.9	50.5	33.6	25.2	**29.72**	43	53	1.233	17	73	4.294	13	73	5.615
102.3	51.2	34.1	25.6	**29.32**	43	53	1.233	16	74	4.625	14	72	5.143
104.7	52.4	34.9	26.2	**28.65**	22	73	3.318	16	74	4.625	30	56	1.867
104.8	52.4	34.9	26.2	**28.63**	31	62	2.000	16	74	4.625	21	65	3.095
104.8	52.4	34.9	26.2	**28.63**	21	75	3.571	17	73	4.294	30	56	1.867
105.8	52.9	35.3	26.5	**28.35**	30	64	2.133	17	73	4.294	21	65	3.095
107.1	53.6	35.7	26.8	**28.01**	41	52	1.268	17	73	4.294	14	72	5.143
108.0	54.0	36.0	27.0	**27.78**	23	74	3.217	16	74	4.625	30	56	1.867
109.6	54.8	36.5	27.4	**27.37**	34	65	1.912	16	74	4.625	21	65	3.095
110.2	55.1	36.7	27.6	**27.22**	43	53	1.233	17	73	4.294	14	72	5.143
112.8	56.4	37.6	28.2	**26.60**	22	73	3.318	17	73	4.294	30	56	1.867
112.9	56.4	37.6	28.2	**26.58**	31	62	2.000	17	73	4.294	21	65	3.095
115.6	57.8	38.5	28.9	**25.95**	32	58	1.813	16	74	4.625	21	65	3.095
116.3	58.2	38.8	29.1	**25.79**	23	74	3.217	17	73	4.294	30	56	1.867
117.3	58.6	39.1	29.3	**25.58**	18	82	4.556				13	73	5.615
117.5	58.7	39.2	29.4	**25.54**	24	71	2.958	16	74	4.625	30	56	1.867
118.1	59.0	39.4	29.5	**25.41**	34	65	1.912	17	73	4.294	21	65	3.095
119.0	59.5	39.7	29.8	**25.21**	25	73	2.920	16	74	4.625	30	56	1.867

119.5	59.8	39.8	29.9	**25.10**	17	76	4.471				13	73	5.615
123.1	61.5	41.0	30.8	**24.38**	37	63	1.703	16	74	4.625	21	65	3.095
123.7	61.8	41.2	30.9	**24.26**	36	61	1.694	16	74	4.625	21	65	3.095
124.5	62.3	41.5	31.1	**24.09**	32	58	1.813	17	73	4.294	21	65	3.095
125.3	62.7	41.8	31.3	**23.94**	19	81	4.263				13	73	5.615
126.5	63.3	42.2	31.6	**23.71**	24	71	2.958	17	73	4.294	30	56	1.867
128.0	64.0	42.7	32.0	**23.43**	18	82	4.556				14	72	5.143
128.2	64.1	42.7	32.0	**23.41**	25	73	2.920	17	73	4.294	30	56	1.867
128.7	64.3	42.9	32.2	**23.31**	35	57	1.629	16	74	4.625	21	65	3.095
129.1	64.5	43.0	32.3	**23.24**	26	70	2.692	16	74	4.625	30	56	1.867
130.5	65.2	43.5	32.6	**22.99**	17	76	4.471				14	72	5.143
132.6	66.3	44.2	33.1	**22.63**	37	63	1.703	17	73	4.294	21	65	3.095
133.2	66.6	44.4	33.3	**22.52**	36	61	1.694	17	73	4.294	21	65	3.095
133.6	66.8	44.5	33.4	**22.46**	20	80	4.000				13	73	5.615
135.1	67.6	45.0	33.8	**22.20**	28	72	2.571	16	74	4.625	30	56	1.867
136.2	68.1	45.4	34.1	**22.02**	39	60	1.538	16	74	4.625	21	65	3.095
136.8	68.4	45.6	34.2	**21.92**	19	81	4.263				14	72	5.143
138.6	69.3	46.2	34.6	**21.65**	35	57	1.629	17	73	4.294	21	65	3.095
139.0	69.5	46.3	34.8	**21.58**	26	70	2.692	17	73	4.294	30	56	1.867
140.0	70.0	46.7	35.0	**21.42**	27	67	2.481	16	74	4.625	30	56	1.867
145.5	72.8	48.5	36.4	**20.61**	28	72	2.571	17	73	4.294	30	56	1.867
145.8	72.9	48.6	36.5	**20.57**	20	80	4.000				14	72	5.143
146.0	73.0	48.7	36.5	**20.54**	29	69	2.379	16	74	4.625	30	56	1.867
146.7	73.4	48.9	36.7	**20.45**	39	60	1.538	17	73	4.294	21	65	3.095
149.6	74.8	49.9	37.4	**20.05**	21	75	3.571				13	73	5.615
149.7	74.8	49.9	37.4	**20.04**	40	56	1.400	16	74	4.625	21	65	3.095
150.8	75.4	50.3	37.7	**19.89**	27	67	2.481	17	73	4.294	30	56	1.867
154.4	77.2	51.5	38.6	**19.43**	42	57	1.357	16	74	4.625	21	65	3.095
157.3	78.7	52.4	39.3	**19.07**	29	69	2.379	17	73	4.294	30	56	1.867
161.0	80.5	53.7	40.3	**18.63**	22	73	3.318				13	73	5.615
161.2	80.6	53.7	40.3	**18.61**	40	56	1.400	17	73	4.294	21	65	3.095
162.9	81.4	54.3	40.7	**18.42**	30	64	2.133	16	74	4.625	30	56	1.867
163.3	81.7	54.4	40.8	**18.37**	21	75	3.571				14	72	5.143
165.2	82.6	55.1	41.3	**18.16**	41	52	1.268	16	74	4.625	21	65	3.095
166.0	83.0	55.3	41.5	**18.07**	23	74	3.217				13	73	5.615
166.3	83.2	55.4	41.6	**18.04**	42	57	1.357	17	73	4.294	21	65	3.095
170.0	85.0	56.7	42.5	**17.64**	43	53	1.233	16	74	4.625	21	65	3.095
173.7	86.9	57.9	43.4	**17.27**	31	62	2.000	16	74	4.625	30	56	1.867
175.4	87.7	58.5	43.9	**17.10**	30	64	2.133	17	73	4.294	30	56	1.867
175.8	87.9	58.6	43.9	**17.06**	22	73	3.318				14	72	5.143
181.3	90.7	60.4	45.3	**16.55**	23	74	3.217				14	72	5.143
178.0	89.0	59.3	44.5	**16.86**	41	52	1.268	17	73	4.294	21	65	3.095
180.6	90.3	60.2	45.1	**16.61**	24	71	2.958				13	73	5.615
181.8	90.9	60.6	45.4	**16.50**	34	65	1.912	16	74	4.625	30	56	1.867
183.0	91.5	61.0	45.7	**16.40**	25	73	2.920				13	73	5.615
183.1	91.6	61.0	45.8	**16.38**	43	53	1.233	17	73	4.294	21	65	3.095
187.1	93.6	62.4	46.8	**16.03**	31	62	2.000	17	73	4.294	30	56	1.867
191.7	95.9	63.9	47.9	**15.65**	32	58	1.813	16	74	4.625	30	56	1.867
199.8	99.9	66.6	49.9	**15.02**	25	73	2.920				14	72	5.143
195.8	97.9	65.3	48.9	**15.32**	34	65	1.912	17	73	4.294	30	56	1.867
197.2	98.6	65.7	49.3	**15.21**	24	71	2.958				14	72	5.143
198.4	99.2	66.1	49.6	**15.12**	26	70	2.692				13	73	5.615
204.1	102.0	68.0	51.0	**14.70**	37	63	1.703	16	74	4.625	30	56	1.867
205.1	102.5	68.4	51.3	**14.63**	36	61	1.694	16	74	4.625	30	56	1.867
206.5	103.2	68.8	51.6	**14.53**	32	58	1.813	17	73	4.294	30	56	1.867
207.8	103.9	69.3	51.9	**14.44**	28	72	2.571				13	73	5.615
212.8	106.4	70.9	53.2	**14.10**	18	82	4.556				21	65	3.095
213.4	106.7	71.1	53.3	**14.06**	35	57	1.629	16	74	4.625	30	56	1.867
215.3	107.6	71.8	53.8	**13.93**	27	67	2.481				13	73	5.615
216.7	108.3	72.2	54.2	**13.85**	26	70	2.692				14	72	5.143
216.8	108.4	72.3	54.2	**13.84**	17	76	4.471				21	65	3.095
219.8	109.9	73.3	55.0	**13.65**	37	63	1.703	17	73	4.294	30	56	1.867
220.9	110.4	73.6	55.2	**13.58**	36	61	1.694	17	73	4.294	30	56	1.867
224.5	112.3	74.8	56.1	**13.36**	29	69	2.379				13	73	5.615
225.9	112.9	75.3	56.5	**13.28**	39	60	1.538	16	74	4.625	30	56	1.867
226.9	113.4	75.6	56.7	**13.22**	28	72	2.571				14	72	5.143
227.4	113.7	75.8	56.8	**13.20**	19	81	4.263				21	65	3.095
229.8	114.9	76.6	57.5	**13.05**	35	57	1.629	17	73	4.294	30	56	1.867
235.1	117.5	78.4	58.8	**12.76**	27	67	2.481				14	72	5.143
242.3	121.2	80.8	60.6	**12.38**	20	80	4.000				21	65	3.095
243.3	121.6	81.1	60.8	**12.33**	39	60	1.538	17	73	4.294	30	56	1.867
245.2	122.6	81.7	61.3	**12.24**	29	69	2.379				14	72	5.143
248.2	124.1	82.7	62.1	**12.09**	40	56	1.400	16	74	4.625	30	56	1.867
250.4	125.2	83.5	62.6	**11.98**	30	64	2.133				13	73	5.615
256.0	128.0	85.3	64.0	**11.72**	42	57	1.357	16	74	4.625	30	56	1.867
267.1	133.6	89.0	66.8	**11.23**	31	62	2.000				13	73	5.615

267.3	133.7	89.1	66.8	**11.22**	40	56	1.400	17	73	4.294	30	56	1.867
271.4	135.7	90.5	67.8	**11.05**	21	75	3.571				21	65	3.095
273.4	136.7	91.1	68.4	**10.97**	30	64	2.133				14	72	5.143
274.0	137.0	91.3	68.5	**10.95**	41	52	1.268	16	74	4.625	30	56	1.867
275.8	137.9	91.9	68.9	**10.88**	42	57	1.357	17	73	4.294	30	56	1.867
279.5	139.7	93.2	69.9	**10.74**	34	65	1.912				13	73	5.615
281.9	141.0	94.0	70.5	**10.64**	43	53	1.233	16	74	4.625	30	56	1.867
291.7	145.8	97.2	72.9	**10.29**	31	62	2.000				14	72	5.143
292.1	146.0	97.4	73.0	**10.27**	22	73	3.318				21	65	3.095
294.8	147.4	98.3	73.7	**10.18**	32	58	1.813				13	73	5.615
295.1	147.5	98.4	73.8	**10.17**	41	52	1.268	17	73	4.294	30	56	1.867
301.2	150.6	100.4	75.3	**9.96**	23	74	3.217				21	65	3.095
303.6	151.8	101.2	75.9	**9.88**	43	53	1.233	17	73	4.294	30	56	1.867
305.1	152.6	101.7	76.3	**9.83**	34	65	1.912				14	72	5.143
313.8	156.9	104.6	78.4	**9.56**	37	63	1.703				13	73	5.615
315.3	157.6	105.1	78.8	**9.51**	36	61	1.694				13	73	5.615
321.8	160.9	107.3	80.5	**9.32**	32	58	1.813				14	72	5.143
327.6	163.8	109.2	81.9	**9.16**	24	71	2.958				21	65	3.095
328.0	164.0	109.3	82.0	**9.15**	35	57	1.629				13	73	5.615
331.9	166.0	110.6	83.0	**9.04**	25	73	2.920				21	65	3.095
342.6	171.3	114.2	85.6	**8.76**	37	63	1.703				14	72	5.143
344.3	172.1	114.8	86.1	**8.71**	36	61	1.694				14	72	5.143
347.3	173.6	115.8	86.8	**8.64**	39	60	1.538				13	73	5.615
352.8	176.4	117.6	88.2	**8.50**	18	82	4.556				30	56	1.867
358.2	179.1	119.4	89.5	**8.38**	35	57	1.629				14	72	5.143
359.5	179.7	119.8	89.9	**8.35**	17	76	4.471				30	56	1.867
360.0	180.0	120.0	90.0	**8.33**	26	70	2.692				21	65	3.095
376.9	188.5	125.6	94.2	**7.96**	28	72	2.571				21	65	3.095
377.0	188.5	125.7	94.2	**7.96**	19	81	4.263				30	56	1.867
379.2	189.6	126.4	94.8	**7.91**	39	60	1.538				14	72	5.143
381.6	190.8	127.2	95.4	**7.86**	40	56	1.400				13	73	5.615
390.6	195.3	130.2	97.6	**7.68**	27	67	2.481				21	65	3.095
393.7	196.8	131.2	98.4	**7.62**	42	57	1.357				13	73	5.615
401.8	200.9	133.9	100.4	**7.47**	20	80	4.000				30	56	1.867
407.4	203.7	135.8	101.8	**7.36**	29	69	2.379				21	65	3.095
416.7	208.3	138.9	104.2	**7.20**	40	56	1.400				14	72	5.143
429.8	214.9	143.3	107.5	**6.98**	42	57	1.357				14	72	5.143
421.2	210.6	140.4	105.3	**7.12**	41	52	1.268				13	73	5.615
433.4	216.7	144.5	108.4	**6.92**	43	53	1.233				13	73	5.615
450.0	225.0	150.0	112.5	**6.67**	21	75	3.571				30	56	1.867
454.3	227.2	151.4	113.6	**6.60**	30	64	2.133				21	65	3.095
459.9	230.0	153.3	115.0	**6.52**	41	52	1.268				14	72	5.143
473.3	236.6	157.8	118.3	**6.34**	43	53	1.233				14	72	5.143
484.3	242.2	161.4	121.1	**6.19**	22	73	3.318				30	56	1.867
484.6	242.3	161.5	121.2	**6.19**	31	62	2.000				21	65	3.095
499.5	249.8	166.5	124.9	**6.01**	23	74	3.217				30	56	1.867
507.0	253.5	169.0	126.7	**5.92**	34	65	1.912				21	65	3.095
534.7	267.4	178.2	133.7	**5.61**	32	58	1.813				21	65	3.095
543.3	271.6	181.1	135.8	**5.52**	24	71	2.958				30	56	1.867
550.4	275.2	183.5	137.6	**5.45**	25	73	2.920				30	56	1.867
569.2	284.6	189.7	142.3	**5.27**	37	63	1.703				21	65	3.095
572.0	286.0	190.7	143.0	**5.24**	36	61	1.694				21	65	3.095
595.1	297.6	198.4	148.8	**5.04**	35	57	1.629				21	65	3.095
596.9	298.5	199.0	149.2	**5.03**	26	70	2.692				30	56	1.867
625.0	312.5	208.3	156.3	**4.80**	28	72	2.571				30	56	1.867
630.0	315.0	210.0	157.5	**4.76**	39	60	1.538				21	65	3.095
647.7	323.8	215.9	161.9	**4.63**	27	67	2.481				30	56	1.867
675.5	337.7	225.2	168.9	**4.44**	29	69	2.379				30	56	1.867
692.3	346.2	230.8	173.1	**4.33**	40	56	1.400				21	65	3.095
714.2	357.1	238.1	178.5	**4.20**	42	57	1.357				21	65	3.095
753.3	376.7	251.1	188.3	**3.98**	30	64	2.133				30	56	1.867
764.2	382.1	254.7	191.1	**3.93**	41	52	1.268				21	65	3.095
786.4	393.2	262.1	196.6	**3.82**	43	53	1.233				21	65	3.095
803.6	401.8	267.9	200.9	**3.73**	31	62	2.000				30	56	1.867
840.7	420.3	280.2	210.2	**3.57**	34	65	1.912				30	56	1.867
886.7	443.3	295.6	221.7	**3.38**	32	58	1.813				30	56	1.867
943.9	471.9	314.6	236.0	**3.18**	37	63	1.703				30	56	1.867
948.5	474.2	316.2	237.1	**3.16**	36	61	1.694				30	56	1.867
986.8	493.4	328.9	246.7	**3.04**	35	57	1.629				30	56	1.867
1044.6	522.3	348.2	261.2	**2.87**	39	60	1.538				30	56	1.867
1148.0	574.0	382.7	287.0	**2.61**	40	56	1.400				30	56	1.867
1184.2	592.1	394.7	296.1	**2.53**	42	57	1.357				30	56	1.867
1267.2	633.6	422.4	316.8	**2.37**	41	52	1.268				30	56	1.867
1303.9	652.0	434.6	326.0	**2.30**	43	53	1.233				30	56	1.867

ESR6

OUTPUT SPEEDS (NOMINAL)				OUTPUT	FIRST PAIR	
3000	1500	1000	750	RATIO	PINION	WHEEL
652.2	326.1	217.4	163.0	**4.60**	20	92
741.6	370.8	247.2	185.4	**4.05**	22	89
837.2	418.6	279.1	209.3	**3.58**	24	86
928.6	464.3	309.5	232.1	**3.23**	26	84
1048.2	524.1	349.4	262.0	**2.86**	29	83
1162.5	581.3	387.5	290.6	**2.58**	31	80
1307.7	653.8	435.9	326.9	**2.29**	34	78
1421.1	710.5	473.7	355.3	**2.11**	36	76
1583.3	791.7	527.8	395.8	**1.89**	38	72
1714.3	857.1	571.4	428.6	**1.75**	40	70
1897.1	948.5	632.4	474.3	**1.58**	43	68
2156.3	1078.1	718.8	539.1	**1.39**	46	64
3000.0	1500.0	1000.0	750.0	**1.00**	55	55
4500.0	2250.0	1500.0	1125.0	**0.67**	66	44

ESR7

OUTPUT SPEEDS (NOMINAL)				OUTPUT	FIRST PAIR	
3000	1500	1000	750	RATIO	PINION	WHEEL
652.2	326.1	217.4	163.0	**4.60**	20	92
741.6	370.8	247.2	185.4	**4.05**	22	89
837.2	418.6	279.1	209.3	**3.58**	24	86
928.6	464.3	309.5	232.1	**3.23**	26	84
1048.2	524.1	349.4	262.0	**2.86**	29	83
1162.5	581.3	387.5	290.6	**2.58**	31	80
1307.7	653.8	435.9	326.9	**2.29**	34	78
1421.1	710.5	473.7	355.3	**2.11**	36	76
1583.3	791.7	527.8	395.8	**1.89**	38	72
1714.3	857.1	571.4	428.6	**1.75**	40	70
1897.1	948.5	632.4	474.3	**1.58**	43	68
2156.3	1078.1	718.8	539.1	**1.39**	46	64
3000.0	1500.0	1000.0	750.0	**1.00**	55	55
4500.0	2250.0	1500.0	1125.0	**0.67**	66	44

ESR8

OUTPUT SPEEDS (NOMINAL)				OUTPUT	FIRST PAIR	
3000	1500	1000	750	RATIO	PINION	WHEEL
640.8	320.4	213.6	160.2	**4.68**	22	103
742.6	371.3	247.5	185.6	**4.04**	25	101
835.1	417.5	278.4	208.8	**3.59**	27	97
937.5	468.8	312.5	234.4	**3.20**	30	96
1043.5	521.7	347.8	260.9	**2.88**	32	92
1166.7	583.3	388.9	291.7	**2.57**	35	90
1295.5	647.7	431.8	323.9	**2.32**	38	88
1428.6	714.3	476.2	357.1	**2.10**	40	84
1573.2	786.6	524.4	393.3	**1.91**	43	82
1708.9	854.4	569.6	427.2	**1.76**	45	79
1894.7	947.4	631.6	473.7	**1.58**	48	76
2040.0	1020.0	680.0	510.0	**1.47**	51	75
3000.0	1500.0	1000.0	750.0	**1.00**	62	62
4500.0	2250.0	1500.0	1125.0	**0.67**	75	50

ESR9

OUTPUT SPEEDS (NOMINAL)				OUTPUT
3000	1500	1000	750	RATIO
50.0	25.0	16.7	12.5	**60.00**
60.0	30.0	20.0	15.0	**50.00**
73.2	36.6	24.4	18.3	**41.00**
100.0	50.0	33.3	25.0	**30.00**
120.0	60.0	40.0	30.0	**25.00**
150.0	75.0	50.0	37.5	**20.00**
206.9	103.4	69.0	51.7	**14.50**
315.8	157.9	105.3	78.9	**9.50**
409.3	204.6	136.4	102.3	**7.33**
600.0	300.0	200.0	150.0	**5.00**

ESR10

OUTPUT SPEEDS (NOMINAL)				OUTPUT
3000	1500	1000	750	RATIO
50.0	25.0	16.7	12.5	**60.00**
60.0	30.0	20.0	15.0	**50.00**
75.0	37.5	25.0	18.8	**40.00**
103.4	51.7	34.5	25.9	**29.00**
115.4	57.7	38.5	28.8	**26.00**
142.9	71.4	47.6	35.7	**21.00**
206.9	103.4	69.0	51.7	**14.50**
230.8	115.4	76.9	57.7	**13.00**
285.7	142.9	95.2	71.4	**10.50**
409.3	204.6	136.4	102.3	**7.33**
576.9	288.5	192.3	144.2	**5.20**

ESR11

OUTPUT SPEEDS (NOMINAL)				OUTPUT
3000	1500	1000	750	RATIO
50.0	25.0	16.7	12.5	**60.00**
60.0	30.0	20.0	15.0	**50.00**
75.0	37.5	25.0	18.8	**40.00**
100.0	50.0	33.3	25.0	**30.00**
120.0	60.0	40.0	30.0	**25.00**
150.0	75.0	50.0	37.5	**20.00**
200.0	100.0	66.7	50.0	**15.00**
300.0	150.0	100.0	75.0	**10.00**
409.3	204.6	136.4	102.3	**7.33**
625.0	312.5	208.3	156.3	**4.80**

ERA33

OUTPUT SPEEDS (NOMINAL)				OUTPUT	FIRST PAIR			WORM
3000	1500	1000	750	RATIO	PINION	WHEEL	RATIO:1	RATIO:1
13.0	13.0	13.0	13.0	**230.00**	20	92	4.600	50.000
14.8	14.8	14.8	14.8	**202.27**	22	89	4.045	50.000
16.7	16.7	16.7	16.7	**179.17**	24	86	3.583	50.000
18.6	18.6	18.6	18.6	**161.54**	26	84	3.231	50.000
21.0	21.0	21.0	21.0	**143.10**	29	83	2.862	50.000
23.3	23.3	23.3	23.3	**129.03**	31	80	2.581	50.000
26.1	26.1	26.1	26.1	**115.00**	20	92	4.600	25.000
26.2	26.2	26.2	26.2	**114.71**	34	78	2.294	50.000
28.4	28.4	28.4	28.4	**105.56**	36	76	2.111	50.000
29.7	29.7	29.7	29.7	**101.14**	22	89	4.045	25.000
31.7	31.7	31.7	31.7	**94.74**	38	72	1.895	50.000
33.5	33.5	33.5	33.5	**89.58**	24	86	3.583	25.000
34.3	34.3	34.3	34.3	**87.50**	40	70	1.750	50.000
37.1	37.1	37.1	37.1	**80.77**	26	84	3.231	25.000
37.9	37.9	37.9	37.9	**79.07**	43	68	1.581	50.000
41.9	41.9	41.9	41.9	**71.55**	29	83	2.862	25.000
43.1	43.1	43.1	43.1	**69.57**	46	64	1.391	50.000
46.5	46.5	46.5	46.5	**64.52**	31	80	2.581	25.000
52.3	52.3	52.3	52.3	**57.35**	34	78	2.294	25.000
56.8	56.8	56.8	56.8	**52.78**	36	76	2.111	25.000
60.0	60.0	60.0	60.0	**50.00**	55	55	1.000	50.000
63.3	63.3	63.3	63.3	**47.37**	38	72	1.895	25.000
68.6	68.6	68.6	68.6	**43.75**	40	70	1.750	25.000
75.9	75.9	75.9	75.9	**39.53**	43	68	1.581	25.000
86.3	86.3	86.3	86.3	**34.78**	46	64	1.391	25.000
90.0	90.0	90.0	90.0	**33.35**	20	92	4.600	7.250
90.0	90.0	90.0	90.0	**33.33**	66	44	0.667	50.000
102.3	102.3	102.3	102.3	**29.33**	22	89	4.045	7.250
115.5	115.5	115.5	115.5	**25.98**	24	86	3.583	7.250
120.0	120.0	120.0	120.0	**25.00**	55	55	1.000	25.000
128.1	128.1	128.1	128.1	**23.42**	26	84	3.231	7.250
144.6	144.6	144.6	144.6	**20.75**	29	83	2.862	7.250
160.3	160.3	160.3	160.3	**18.71**	31	80	2.581	7.250
180.0	180.0	180.0	180.0	**16.67**	66	44	0.667	25.000
180.4	180.4	180.4	180.4	**16.63**	34	78	2.294	7.250
196.0	196.0	196.0	196.0	**15.31**	36	76	2.111	7.250
218.4	218.4	218.4	218.4	**13.74**	38	72	1.895	7.250
236.5	236.5	236.5	236.5	**12.69**	40	70	1.750	7.250
261.7	261.7	261.7	261.7	**11.47**	43	68	1.581	7.250
297.4	297.4	297.4	297.4	**10.09**	46	64	1.391	7.250
413.8	413.8	413.8	413.8	**7.25**	55	55	1.000	7.250
620.7	620.7	620.7	620.7	**4.83**	66	44	0.667	7.250

ERA44

OUTPUT SPEEDS (NOMINAL)				OUTPUT	FIRST PAIR			WORM
3000	1500	1000	750	RATIO	PINION	WHEEL	RATIO:1	RATIO:1
12.8	12.8	12.8	12.8	**234.09**	22	103	4.682	50.000
14.9	14.9	14.9	14.9	**202.00**	25	101	4.040	50.000
16.7	16.7	16.7	16.7	**179.63**	27	97	3.593	50.000
18.8	18.8	18.8	18.8	**160.00**	30	96	3.200	50.000
20.9	20.9	20.9	20.9	**143.75**	32	92	2.875	50.000
23.3	23.3	23.3	23.3	**128.57**	35	90	2.571	50.000
25.9	25.9	25.9	25.9	**115.79**	38	88	2.316	50.000
26.7	26.7	26.7	26.7	**112.36**	22	103	4.682	24.000
28.6	28.6	28.6	28.6	**105.00**	40	84	2.100	50.000
30.9	30.9	30.9	30.9	**96.96**	25	101	4.040	24.000
31.5	31.5	31.5	31.5	**95.35**	43	82	1.907	50.000
34.2	34.2	34.2	34.2	**87.78**	45	79	1.756	50.000
34.8	34.8	34.8	34.8	**86.22**	27	97	3.593	24.000
37.9	37.9	37.9	37.9	**79.17**	48	76	1.583	50.000
39.1	39.1	39.1	39.1	**76.80**	30	96	3.200	24.000
40.8	40.8	40.8	40.8	**73.53**	51	75	1.471	50.000
43.5	43.5	43.5	43.5	**69.00**	32	92	2.875	24.000
48.6	48.6	48.6	48.6	**61.71**	35	90	2.571	24.000
54.0	54.0	54.0	54.0	**55.58**	38	88	2.316	24.000
59.5	59.5	59.5	59.5	**50.40**	40	84	2.100	24.000
60.0	60.0	60.0	60.0	**50.00**	62	62	1.000	50.000
65.5	65.5	65.5	65.5	**45.77**	43	82	1.907	24.000
71.2	71.2	71.2	71.2	**42.13**	45	79	1.756	24.000
78.9	78.9	78.9	78.9	**38.00**	48	76	1.583	24.000
85.0	85.0	85.0	85.0	**35.29**	51	75	1.471	24.000
88.4	88.4	88.4	88.4	**33.94**	22	103	4.682	7.250
90.0	90.0	90.0	90.0	**33.33**	75	50	0.667	50.000
102.4	102.4	102.4	102.4	**29.29**	25	101	4.040	7.250
115.2	115.2	115.2	115.2	**26.05**	27	97	3.593	7.250
125.0	125.0	125.0	125.0	**24.00**	62	62	1.000	24.000
129.3	129.3	129.3	129.3	**23.20**	30	96	3.200	7.250
143.9	143.9	143.9	143.9	**20.84**	32	92	2.875	7.250
160.9	160.9	160.9	160.9	**18.64**	35	90	2.571	7.250
178.7	178.7	178.7	178.7	**16.79**	38	88	2.316	7.250
187.5	187.5	187.5	187.5	**16.00**	75	50	0.667	24.000
197.0	197.0	197.0	197.0	**15.23**	40	84	2.100	7.250
217.0	217.0	217.0	217.0	**13.83**	43	82	1.907	7.250
235.7	235.7	235.7	235.7	**12.73**	45	79	1.756	7.250
261.3	261.3	261.3	261.3	**11.48**	48	76	1.583	7.250
281.4	281.4	281.4	281.4	**10.66**	51	75	1.471	7.250
413.8	413.8	413.8	413.8	**7.25**	62	62	1.000	7.250
620.7	620.7	620.7	620.7	**4.83**	75	50	0.667	7.250

ECR1

BOTH SHAFTS SAME SPEED

OUTPUT SPEEDS (NOMINAL)								OUTPUT	FIRST PAIR			TRANSVERSE PAIR			OUTPUT PAIR		
3000		1500		1000		750		RATIO	PINION	WHEEL	RATIO:1	PINION	WHEEL	RATIO:1	PINION	WHEEL	RATIO:1
120.8	120.8	60.4	60.4	40.3	40.3	30.2	30.2	**24.84**	20	92	4.600	42	42	1.000	15	81	5.400
137.3	137.3	68.7	68.7	45.8	45.8	34.3	34.3	**21.85**	22	89	4.045	42	42	1.000	15	81	5.400
155.0	155.0	77.5	77.5	51.7	51.7	38.8	38.8	**19.35**	24	86	3.583	42	42	1.000	15	81	5.400
172.0	172.0	86.0	86.0	57.3	57.3	43.0	43.0	**17.45**	26	84	3.231	42	42	1.000	15	81	5.400
194.1	194.1	97.1	97.1	64.7	64.7	48.5	48.5	**15.46**	29	83	2.862	42	42	1.000	15	81	5.400
205.5	205.5	102.7	102.7	68.5	68.5	51.4	51.4	**14.60**	20	92	4.600	42	42	1.000	23	73	3.174
215.3	215.3	107.6	107.6	71.8	71.8	53.8	53.8	**13.94**	31	80	2.581	42	42	1.000	15	81	5.400
233.6	233.6	116.8	116.8	77.9	77.9	58.4	58.4	**12.84**	22	89	4.045	42	42	1.000	23	73	3.174
242.2	242.2	121.1	121.1	80.7	80.7	60.5	60.5	**12.39**	34	78	2.294	42	42	1.000	15	81	5.400
263.2	263.2	131.6	131.6	87.7	87.7	65.8	65.8	**11.40**	36	76	2.111	42	42	1.000	15	81	5.400
263.8	263.8	131.9	131.9	87.9	87.9	65.9	65.9	**11.37**	24	86	3.583	42	42	1.000	23	73	3.174
292.6	292.6	146.3	146.3	97.5	97.5	73.1	73.1	**10.25**	26	84	3.231	42	42	1.000	23	73	3.174
293.2	293.2	146.6	146.6	97.7	97.7	73.3	73.3	**10.23**	38	72	1.895	42	42	1.000	15	81	5.400
317.5	317.5	158.7	158.7	105.8	105.8	79.4	79.4	**9.45**	40	70	1.750	42	42	1.000	15	81	5.400
330.3	330.3	165.1	165.1	110.1	110.1	82.6	82.6	**9.08**	29	83	2.862	42	42	1.000	23	73	3.174
351.3	351.3	175.7	175.7	117.1	117.1	87.8	87.8	**8.54**	43	68	1.581	42	42	1.000	15	81	5.400
366.3	366.3	183.1	183.1	122.1	122.1	91.6	91.6	**8.19**	31	80	2.581	42	42	1.000	23	73	3.174
412.0	412.0	206.0	206.0	137.3	137.3	103.0	103.0	**7.28**	34	78	2.294	42	42	1.000	23	73	3.174
446.2	446.2	223.1	223.1	148.7	148.7	111.6	111.6	**6.72**	20	92	4.600	42	42	1.000	39	57	1.462
447.7	447.7	223.9	223.9	149.2	149.2	111.9	111.9	**6.70**	36	76	2.111	42	42	1.000	23	73	3.174
498.9	498.9	249.4	249.4	166.3	166.3	124.7	124.7	**6.01**	38	72	1.895	42	42	1.000	23	73	3.174
507.4	507.4	253.7	253.7	169.1	169.1	126.8	126.8	**5.91**	22	89	4.045	42	42	1.000	39	57	1.462
540.1	540.1	270.1	270.1	180.0	180.0	135.0	135.0	**5.55**	40	70	1.750	42	42	1.000	23	73	3.174
572.8	572.8	286.4	286.4	190.9	190.9	143.2	143.2	**5.24**	24	86	3.583	42	42	1.000	39	57	1.462
597.7	597.7	298.9	298.9	199.2	199.2	149.4	149.4	**5.02**	43	68	1.581	42	42	1.000	23	73	3.174
635.3	635.3	317.7	317.7	211.8	211.8	158.8	158.8	**4.72**	26	84	3.231	42	42	1.000	39	57	1.462
717.2	717.2	358.6	358.6	239.1	239.1	179.3	179.3	**4.18**	29	83	2.862	42	42	1.000	39	57	1.462
795.4	795.4	397.7	397.7	265.1	265.1	198.8	198.8	**3.77**	31	80	2.581	42	42	1.000	39	57	1.462
894.7	894.7	447.4	447.4	298.2	298.2	223.7	223.7	**3.35**	34	78	2.294	42	42	1.000	39	57	1.462
972.3	972.3	486.1	486.1	324.1	324.1	243.1	243.1	**3.09**	36	76	2.111	42	42	1.000	39	57	1.462
1083.3	1083.3	541.7	541.7	361.1	361.1	270.8	270.8	**2.77**	38	72	1.895	42	42	1.000	39	57	1.462
1172.9	1172.9	586.5	586.5	391.0	391.0	293.2	293.2	**2.56**	40	70	1.750	42	42	1.000	39	57	1.462
1298.0	1298.0	649.0	649.0	432.7	432.7	324.5	324.5	**2.31**	43	68	1.581	42	42	1.000	39	57	1.462

INNER SHAFT TWICE OUTER SHAFT SPEED

OUTPUT SPEEDS (NOMINAL)								OUTPUT	FIRST PAIR			TRANSVERSE PAIR			OUTPUT PAIR		
3000		1500		1000		750		RATIO	PINION	WHEEL	RATIO:1	PINION	WHEEL	RATIO:1	PINION	WHEEL	RATIO:1
120.8	60.4	60.4	30.2	40.3	20.1	30.2	15.1	**24.84**	20	92	4.600	28	56	2.000	15	81	5.400
137.3	68.7	68.7	34.3	45.8	22.9	34.3	17.2	**21.85**	22	89	4.045	28	56	2.000	15	81	5.400
155.0	77.5	77.5	38.8	51.7	25.8	38.8	19.4	**19.35**	24	86	3.583	28	56	2.000	15	81	5.400
172.0	86.0	86.0	43.0	57.3	28.7	43.0	21.5	**17.45**	26	84	3.231	28	56	2.000	15	81	5.400
194.1	97.1	97.1	48.5	64.7	32.4	48.5	24.3	**15.46**	29	83	2.862	28	56	2.000	15	81	5.400
205.5	102.7	102.7	51.4	68.5	34.2	51.4	25.7	**14.60**	20	92	4.600	28	56	2.000	23	73	3.174
215.3	107.6	107.6	53.8	71.8	35.9	53.8	26.9	**13.94**	31	80	2.581	28	56	2.000	15	81	5.400
233.6	116.8	116.8	58.4	77.9	38.9	58.4	29.2	**12.84**	22	89	4.045	28	56	2.000	23	73	3.174
242.2	121.1	121.1	60.5	80.7	40.4	60.5	30.3	**12.39**	34	78	2.294	28	56	2.000	15	81	5.400
263.2	131.6	131.6	65.8	87.7	43.9	65.8	32.9	**11.40**	36	76	2.111	28	56	2.000	15	81	5.400
263.8	131.9	131.9	65.9	87.9	44.0	65.9	33.0	**11.37**	24	86	3.583	28	56	2.000	23	73	3.174
292.6	146.3	146.3	73.1	97.5	48.8	73.1	36.6	**10.25**	26	84	3.231	28	56	2.000	23	73	3.174
293.2	146.6	146.6	73.3	97.7	48.9	73.3	36.7	**10.23**	38	72	1.895	28	56	2.000	15	81	5.400
317.5	158.7	158.7	79.4	105.8	52.9	79.4	39.7	**9.45**	40	70	1.750	28	56	2.000	15	81	5.400
330.3	165.1	165.1	82.6	110.1	55.0	82.6	41.3	**9.08**	29	83	2.862	28	56	2.000	23	73	3.174
351.3	175.7	175.7	87.8	117.1	58.6	87.8	43.9	**8.54**	43	68	1.581	28	56	2.000	15	81	5.400
366.3	183.1	183.1	91.6	122.1	61.0	91.6	45.8	**8.19**	31	80	2.581	28	56	2.000	23	73	3.174
412.0	206.0	206.0	103.0	137.3	68.7	103.0	51.5	**7.28**	34	78	2.294	28	56	2.000	23	73	3.174
446.2	223.1	223.1	111.6	148.7	74.4	111.6	55.8	**6.72**	20	92	4.600	28	56	2.000	39	57	1.462
447.7	223.9	223.9	111.9	149.2	74.6	111.9	56.0	**6.70**	36	76	2.111	28	56	2.000	23	73	3.174
498.9	249.4	249.4	124.7	166.3	83.1	124.7	62.4	**6.01**	38	72	1.895	28	56	2.000	23	73	3.174
507.4	253.7	253.7	126.8	169.1	84.6	126.8	63.4	**5.91**	22	89	4.045	28	56	2.000	39	57	1.462
540.1	270.1	270.1	135.0	180.0	90.0	135.0	67.5	**5.55**	40	70	1.750	28	56	2.000	23	73	3.174
572.8	286.4	286.4	143.2	190.9	95.5	143.2	71.6	**5.24**	24	86	3.583	28	56	2.000	39	57	1.462
597.7	298.9	298.9	149.4	199.2	99.6	149.4	74.7	**5.02**	43	68	1.581	28	56	2.000	23	73	3.174
635.3	317.7	317.7	158.8	211.8	105.9	158.8	79.4	**4.72**	26	84	3.231	28	56	2.000	39	57	1.462
717.2	358.6	358.6	179.3	239.1	119.5	179.3	89.6	**4.18**	29	83	2.862	28	56	2.000	39	57	1.462
795.4	397.7	397.7	198.8	265.1	132.6	198.8	99.4	**3.77**	31	80	2.581	28	56	2.000	39	57	1.462
894.7	447.4	447.4	223.7	298.2	149.1	223.7	111.8	**3.35**	34	78	2.294	28	56	2.000	39	57	1.462
972.3	486.1	486.1	243.1	324.1	162.0	243.1	121.5	**3.09**	36	76	2.111	28	56	2.000	39	57	1.462
1083.3	541.7	541.7	270.8	361.1	180.6	270.8	135.4	**2.77**	38	72	1.895	28	56	2.000	39	57	1.462
1172.9	586.5	586.5	293.2	391.0	195.5	293.2	146.6	**2.56**	40	70	1.750	28	56	2.000	39	57	1.462
1298.0	649.0	649.0	324.5	432.7	216.3	324.5	162.2	**2.31**	43	68	1.581	28	56	2.000	39	57	1.462

ECR2

BOTH SHAFTS SAME SPEED

OUTPUT SPEEDS (NOMINAL)								OUTPUT	FIRST PAIR			TRANSVERSE PAIR			THIRD PAIR		
3000		1500		1000		750		RATIO	PINION	WHEEL	RATIO:1	PINION	WHEEL	RATIO:1	PINION	WHEEL	RATIO:1
120.8	120.8	60.4	60.4	40.3	40.3	30.2	30.2	**24.84**	20	92	4.600	42	42	1.000	15	81	5.400
137.3	137.3	68.7	68.7	45.8	45.8	34.3	34.3	**21.85**	22	89	4.045	42	42	1.000	15	81	5.400
155.0	155.0	77.5	77.5	51.7	51.7	38.8	38.8	**19.35**	24	86	3.583	42	42	1.000	15	81	5.400
172.0	172.0	86.0	86.0	57.3	57.3	43.0	43.0	**17.45**	26	84	3.231	42	42	1.000	15	81	5.400
194.1	194.1	97.1	97.1	64.7	64.7	48.5	48.5	**15.46**	29	83	2.862	42	42	1.000	15	81	5.400
205.5	205.5	102.7	102.7	68.5	68.5	51.4	51.4	**14.60**	20	92	4.600	42	42	1.000	23	73	3.174
215.3	215.3	107.6	107.6	71.8	71.8	53.8	53.8	**13.94**	31	80	2.581	42	42	1.000	15	81	5.400
233.6	233.6	116.8	116.8	77.9	77.9	58.4	58.4	**12.84**	22	89	4.045	42	42	1.000	23	73	3.174
242.2	242.2	121.1	121.1	80.7	80.7	60.5	60.5	**12.39**	34	78	2.294	42	42	1.000	15	81	5.400
263.2	263.2	131.6	131.6	87.7	87.7	65.8	65.8	**11.40**	36	76	2.111	42	42	1.000	15	81	5.400
263.8	263.8	131.9	131.9	87.9	87.9	65.9	65.9	**11.37**	24	86	3.583	42	42	1.000	23	73	3.174
292.6	292.6	146.3	146.3	97.5	97.5	73.1	73.1	**10.25**	26	84	3.231	42	42	1.000	23	73	3.174
293.2	293.2	146.6	146.6	97.7	97.7	73.3	73.3	**10.23**	38	72	1.895	42	42	1.000	15	81	5.400
317.5	317.5	158.7	158.7	105.8	105.8	79.4	79.4	**9.45**	40	70	1.750	42	42	1.000	15	81	5.400
330.3	330.3	165.1	165.1	110.1	110.1	82.6	82.6	**9.08**	29	83	2.862	42	42	1.000	23	73	3.174
351.3	351.3	175.7	175.7	117.1	117.1	87.8	87.8	**8.54**	43	68	1.581	42	42	1.000	15	81	5.400
366.3	366.3	183.1	183.1	122.1	122.1	91.6	91.6	**8.19**	31	80	2.581	42	42	1.000	23	73	3.174
412.0	412.0	206.0	206.0	137.3	137.3	103.0	103.0	**7.28**	34	78	2.294	42	42	1.000	23	73	3.174
446.2	446.2	223.1	223.1	148.7	148.7	111.6	111.6	**6.72**	20	92	4.600	42	42	1.000	39	57	1.462
447.7	447.7	223.9	223.9	149.2	149.2	111.9	111.9	**6.70**	36	76	2.111	42	42	1.000	23	73	3.174
498.9	498.9	249.4	249.4	166.3	166.3	124.7	124.7	**6.01**	38	72	1.895	42	42	1.000	23	73	3.174
507.4	507.4	253.7	253.7	169.1	169.1	126.8	126.8	**5.91**	22	89	4.045	42	42	1.000	39	57	1.462
540.1	540.1	270.1	270.1	180.0	180.0	135.0	135.0	**5.55**	40	70	1.750	42	42	1.000	23	73	3.174
572.8	572.8	286.4	286.4	190.9	190.9	143.2	143.2	**5.24**	24	86	3.583	42	42	1.000	39	57	1.462
597.7	597.7	298.9	298.9	199.2	199.2	149.4	149.4	**5.02**	43	68	1.581	42	42	1.000	23	73	3.174
635.3	635.3	317.7	317.7	211.8	211.8	158.8	158.8	**4.72**	26	84	3.231	42	42	1.000	39	57	1.462
717.2	717.2	358.6	358.6	239.1	239.1	179.3	179.3	**4.18**	29	83	2.862	42	42	1.000	39	57	1.462
795.4	795.4	397.7	397.7	265.1	265.1	198.8	198.8	**3.77**	31	80	2.581	42	42	1.000	39	57	1.462
894.7	894.7	447.4	447.4	298.2	298.2	223.7	223.7	**3.35**	34	78	2.294	42	42	1.000	39	57	1.462
972.3	972.3	486.1	486.1	324.1	324.1	243.1	243.1	**3.09**	36	76	2.111	42	42	1.000	39	57	1.462
1083.3	1083.3	541.7	541.7	361.1	361.1	270.8	270.8	**2.77**	38	72	1.895	42	42	1.000	39	57	1.462
1172.9	1172.9	586.5	586.5	391.0	391.0	293.2	293.2	**2.56**	40	70	1.750	42	42	1.000	39	57	1.462
1298.0	1298.0	649.0	649.0	432.7	432.7	324.5	324.5	**2.31**	43	68	1.581	42	42	1.000	39	57	1.462

INNER SHAFT TWICE OUTER SHAFT SPEED

OUTPUT SPEEDS (NOMINAL)								OUTPUT	FIRST PAIR			TRANSVERSE PAIR			THIRD PAIR		
3000		1500		1000		750		RATIO	PINION	WHEEL	RATIO:1	PINION	WHEEL	RATIO:1	PINION	WHEEL	RATIO:1
120.8	60.4	60.4	30.2	40.3	20.1	30.2	15.1	**24.84**	20	92	4.600	28	56	2.000	15	81	5.400
137.3	68.7	68.7	34.3	45.8	22.9	34.3	17.2	**21.85**	22	89	4.045	28	56	2.000	15	81	5.400
155.0	77.5	77.5	38.8	51.7	25.8	38.8	19.4	**19.35**	24	86	3.583	28	56	2.000	15	81	5.400
172.0	86.0	86.0	43.0	57.3	28.7	43.0	21.5	**17.45**	26	84	3.231	28	56	2.000	15	81	5.400
194.1	97.1	97.1	48.5	64.7	32.4	48.5	24.3	**15.46**	29	83	2.862	28	56	2.000	15	81	5.400
205.5	102.7	102.7	51.4	68.5	34.2	51.4	25.7	**14.60**	20	92	4.600	28	56	2.000	23	73	3.174
215.3	107.6	107.6	53.8	71.8	35.9	53.8	26.9	**13.94**	31	80	2.581	28	56	2.000	15	81	5.400
233.6	116.8	116.8	58.4	77.9	38.9	58.4	29.2	**12.84**	22	89	4.045	28	56	2.000	23	73	3.174
242.2	121.1	121.1	60.5	80.7	40.4	60.5	30.3	**12.39**	34	78	2.294	28	56	2.000	15	81	5.400
263.2	131.6	131.6	65.8	87.7	43.9	65.8	32.9	**11.40**	36	76	2.111	28	56	2.000	15	81	5.400
263.8	131.9	131.9	65.9	87.9	44.0	65.9	33.0	**11.37**	24	86	3.583	28	56	2.000	23	73	3.174
292.6	146.3	146.3	73.1	97.5	48.8	73.1	36.6	**10.25**	26	84	3.231	28	56	2.000	23	73	3.174
293.2	146.6	146.6	73.3	97.7	48.9	73.3	36.7	**10.23**	38	72	1.895	28	56	2.000	15	81	5.400
317.5	158.7	158.7	79.4	105.8	52.9	79.4	39.7	**9.45**	40	70	1.750	28	56	2.000	15	81	5.400
330.3	165.1	165.1	82.6	110.1	55.0	82.6	41.3	**9.08**	29	83	2.862	28	56	2.000	23	73	3.174
351.3	175.7	175.7	87.8	117.1	58.6	87.8	43.9	**8.54**	43	68	1.581	28	56	2.000	15	81	5.400
366.3	183.1	183.1	91.6	122.1	61.0	91.6	45.8	**8.19**	31	80	2.581	28	56	2.000	23	73	3.174
412.0	206.0	206.0	103.0	137.3	68.7	103.0	51.5	**7.28**	34	78	2.294	28	56	2.000	23	73	3.174
446.2	223.1	223.1	111.6	148.7	74.4	111.6	55.8	**6.72**	20	92	4.600	28	56	2.000	39	57	1.462
447.7	223.9	223.9	111.9	149.2	74.6	111.9	56.0	**6.70**	36	76	2.111	28	56	2.000	23	73	3.174
498.9	249.4	249.4	124.7	166.3	83.1	124.7	62.4	**6.01**	38	72	1.895	28	56	2.000	23	73	3.174
507.4	253.7	253.7	126.8	169.1	84.6	126.8	63.4	**5.91**	22	89	4.045	28	56	2.000	39	57	1.462
540.1	270.1	270.1	135.0	180.0	90.0	135.0	67.5	**5.55**	40	70	1.750	28	56	2.000	23	73	3.174
572.8	286.4	286.4	143.2	190.9	95.5	143.2	71.6	**5.24**	24	86	3.583	28	56	2.000	39	57	1.462
597.7	298.9	298.9	149.4	199.2	99.6	149.4	74.7	**5.02**	43	68	1.581	28	56	2.000	23	73	3.174
635.3	317.7	317.7	158.8	211.8	105.9	158.8	79.4	**4.72**	26	84	3.231	28	56	2.000	39	57	1.462
717.2	358.6	358.6	179.3	239.1	119.5	179.3	89.6	**4.18**	29	83	2.862	28	56	2.000	39	57	1.462
795.4	397.7	397.7	198.8	265.1	132.6	198.8	99.4	**3.77**	31	80	2.581	28	56	2.000	39	57	1.462
894.7	447.4	447.4	223.7	298.2	149.1	223.7	111.8	**3.35**	34	78	2.294	28	56	2.000	39	57	1.462
972.3	486.1	486.1	243.1	324.1	162.0	243.1	121.5	**3.09**	36	76	2.111	28	56	2.000	39	57	1.462
1083.3	541.7	541.7	270.8	361.1	180.6	270.8	135.4	**2.77**	38	72	1.895	28	56	2.000	39	57	1.462
1172.9	586.5	586.5	293.2	391.0	195.5	293.2	146.6	**2.56**	40	70	1.750	28	56	2.000	39	57	1.462
1298.0	649.0	649.0	324.5	432.7	216.3	324.5	162.2	**2.31**	43	68	1.581	28	56	2.000	39	57	1.462

ECR3

BOTH SHAFTS SAME SPEED

OUTPUT SPEEDS (NOMINAL)								OUTPUT	FIRST PAIR			TRANSVERSE PAIR			THIRD PAIR		
3000		1500		1000		750		RATIO	PINION	WHEEL	RATIO:1	PINION	WHEEL	RATIO:1	PINION	WHEEL	RATIO:1
118.7	118.7	59.3	59.3	39.6	39.6	29.7	29.7	**25.28**	22	103	4.682	42	42	1.000	15	81	5.400
137.5	137.5	68.8	68.8	45.8	45.8	34.4	34.4	**21.82**	25	101	4.040	42	42	1.000	15	81	5.400
154.6	154.6	77.3	77.3	51.5	51.5	38.7	38.7	**19.40**	27	97	3.593	42	42	1.000	15	81	5.400
173.6	173.6	86.8	86.8	57.9	57.9	43.4	43.4	**17.28**	30	96	3.200	42	42	1.000	15	81	5.400
193.2	193.2	96.6	96.6	64.4	64.4	48.3	48.3	**15.53**	32	92	2.875	42	42	1.000	15	81	5.400
201.9	201.9	100.9	100.9	67.3	67.3	50.5	50.5	**14.86**	22	103	4.682	42	42	1.000	23	73	3.174
216.0	216.0	108.0	108.0	72.0	72.0	54.0	54.0	**13.89**	35	90	2.571	42	42	1.000	15	81	5.400
234.0	234.0	117.0	117.0	78.0	78.0	58.5	58.5	**12.82**	25	101	4.040	42	42	1.000	23	73	3.174
239.9	239.9	119.9	119.9	80.0	80.0	60.0	60.0	**12.51**	38	88	2.316	42	42	1.000	15	81	5.400
263.1	263.1	131.5	131.5	87.7	87.7	65.8	65.8	**11.40**	27	97	3.593	42	42	1.000	23	73	3.174
264.6	264.6	132.3	132.3	88.2	88.2	66.1	66.1	**11.34**	40	84	2.100	42	42	1.000	15	81	5.400
291.3	291.3	145.7	145.7	97.1	97.1	72.8	72.8	**10.30**	43	82	1.907	42	42	1.000	15	81	5.400
295.4	295.4	147.7	147.7	98.5	98.5	73.8	73.8	**10.16**	30	96	3.200	42	42	1.000	23	73	3.174
316.5	316.5	158.2	158.2	105.5	105.5	79.1	79.1	**9.48**	45	79	1.756	42	42	1.000	15	81	5.400
328.8	328.8	164.4	164.4	109.6	109.6	82.2	82.2	**9.13**	32	92	2.875	42	42	1.000	23	73	3.174
350.9	350.9	175.4	175.4	117.0	117.0	87.7	87.7	**8.55**	48	76	1.583	42	42	1.000	15	81	5.400
367.6	367.6	183.8	183.8	122.5	122.5	91.9	91.9	**8.16**	35	90	2.571	42	42	1.000	23	73	3.174
408.2	408.2	204.1	204.1	136.1	136.1	102.0	102.0	**7.35**	38	88	2.316	42	42	1.000	23	73	3.174
438.4	438.4	219.2	219.2	146.1	146.1	109.6	109.6	**6.84**	22	103	4.682	42	42	1.000	39	57	1.462
450.1	450.1	225.0	225.0	150.0	150.0	112.5	112.5	**6.67**	40	84	2.100	42	42	1.000	23	73	3.174
495.7	495.7	247.8	247.8	165.2	165.2	123.9	123.9	**6.05**	43	82	1.907	42	42	1.000	23	73	3.174
508.1	508.1	254.0	254.0	169.4	169.4	127.0	127.0	**5.90**	25	101	4.040	42	42	1.000	39	57	1.462
538.4	538.4	269.2	269.2	179.5	179.5	134.6	134.6	**5.57**	45	79	1.756	42	42	1.000	23	73	3.174
571.4	571.4	285.7	285.7	190.5	190.5	142.8	142.8	**5.25**	27	97	3.593	42	42	1.000	39	57	1.462
597.0	597.0	298.5	298.5	199.0	199.0	149.2	149.2	**5.03**	48	76	1.583	42	42	1.000	23	73	3.174
641.4	641.4	320.7	320.7	213.8	213.8	160.4	160.4	**4.68**	30	96	3.200	42	42	1.000	39	57	1.462
714.0	714.0	357.0	357.0	238.0	238.0	178.5	178.5	**4.20**	32	92	2.875	42	42	1.000	39	57	1.462
798.2	798.2	399.1	399.1	266.1	266.1	199.6	199.6	**3.76**	35	90	2.571	42	42	1.000	39	57	1.462
886.4	886.4	443.2	443.2	295.5	295.5	221.6	221.6	**3.38**	38	88	2.316	42	42	1.000	39	57	1.462
977.4	977.4	488.7	488.7	325.8	325.8	244.4	244.4	**3.07**	40	84	2.100	42	42	1.000	39	57	1.462
1076.4	1076.4	538.2	538.2	358.8	358.8	269.1	269.1	**2.79**	43	82	1.907	42	42	1.000	39	57	1.462
1169.2	1169.2	584.6	584.6	389.7	389.7	292.3	292.3	**2.57**	45	79	1.756	42	42	1.000	39	57	1.462
1296.4	1296.4	648.2	648.2	432.1	432.1	324.1	324.1	**2.31**	48	76	1.583	42	42	1.000	39	57	1.462

INNER SHAFT TWICE OUTER SHAFT SPEED

OUTPUT SPEEDS (NOMINAL)								OUTPUT	FIRST PAIR			TRANSVERSE PAIR			THIRD PAIR		
3000		1500		1000		750		RATIO	PINION	WHEEL	RATIO:1	PINION	WHEEL	RATIO:1	PINION	WHEEL	RATIO:1
118.7	59.3	59.3	29.7	39.6	19.8	29.7	14.8	**25.28**	22	103	4.682	28	56	2.000	15	81	5.400
137.5	68.8	68.8	34.4	45.8	22.9	34.4	17.2	**21.82**	25	101	4.040	28	56	2.000	15	81	5.400
154.6	77.3	77.3	38.7	51.5	25.8	38.7	19.3	**19.40**	27	97	3.593	28	56	2.000	15	81	5.400
173.6	86.8	86.8	43.4	57.9	28.9	43.4	21.7	**17.28**	30	96	3.200	28	56	2.000	15	81	5.400
193.2	96.6	96.6	48.3	64.4	32.2	48.3	24.2	**15.53**	32	92	2.875	28	56	2.000	15	81	5.400
201.9	100.9	100.9	50.5	67.3	33.6	50.5	25.2	**14.86**	22	103	4.682	28	56	2.000	23	73	3.174
216.0	108.0	108.0	54.0	72.0	36.0	54.0	27.0	**13.89**	35	90	2.571	28	56	2.000	15	81	5.400
234.0	117.0	117.0	58.5	78.0	39.0	58.5	29.2	**12.82**	25	101	4.040	28	56	2.000	23	73	3.174
239.9	119.9	119.9	60.0	80.0	40.0	60.0	30.0	**12.51**	38	88	2.316	28	56	2.000	15	81	5.400
263.1	131.5	131.5	65.8	87.7	43.8	65.8	32.9	**11.40**	27	97	3.593	28	56	2.000	23	73	3.174
264.6	132.3	132.3	66.1	88.2	44.1	66.1	33.1	**11.34**	40	84	2.100	28	56	2.000	15	81	5.400
291.3	145.7	145.7	72.8	97.1	48.6	72.8	36.4	**10.30**	43	82	1.907	28	56	2.000	15	81	5.400
295.4	147.7	147.7	73.8	98.5	49.2	73.8	36.9	**10.16**	30	96	3.200	28	56	2.000	23	73	3.174
316.5	158.2	158.2	79.1	105.5	52.7	79.1	39.6	**9.48**	45	79	1.756	28	56	2.000	15	81	5.400
328.8	164.4	164.4	82.2	109.6	54.8	82.2	41.1	**9.13**	32	92	2.875	28	56	2.000	23	73	3.174
350.9	175.4	175.4	87.7	117.0	58.5	87.7	43.9	**8.55**	48	76	1.583	28	56	2.000	15	81	5.400
367.6	183.8	183.8	91.9	122.5	61.3	91.9	45.9	**8.16**	35	90	2.571	28	56	2.000	23	73	3.174
408.2	204.1	204.1	102.0	136.1	68.0	102.0	51.0	**7.35**	38	88	2.316	28	56	2.000	23	73	3.174
438.4	219.2	219.2	109.6	146.1	73.1	109.6	54.8	**6.84**	22	103	4.682	28	56	2.000	39	57	1.462
450.1	225.0	225.0	112.5	150.0	75.0	112.5	56.3	**6.67**	40	84	2.100	28	56	2.000	23	73	3.174
495.7	247.8	247.8	123.9	165.2	82.6	123.9	62.0	**6.05**	43	82	1.907	28	56	2.000	23	73	3.174
508.1	254.0	254.0	127.0	169.4	84.7	127.0	63.5	**5.90**	25	101	4.040	28	56	2.000	39	57	1.462
538.4	269.2	269.2	134.6	179.5	89.7	134.6	67.3	**5.57**	45	79	1.756	28	56	2.000	23	73	3.174
571.4	285.7	285.7	142.8	190.5	95.2	142.8	71.4	**5.25**	27	97	3.593	28	56	2.000	39	57	1.462
597.0	298.5	298.5	149.2	199.0	99.5	149.2	74.6	**5.03**	48	76	1.583	28	56	2.000	23	73	3.174
641.4	320.7	320.7	160.4	213.8	106.9	160.4	80.2	**4.68**	30	96	3.200	28	56	2.000	39	57	1.462
714.0	357.0	357.0	178.5	238.0	119.0	178.5	89.2	**4.20**	32	92	2.875	28	56	2.000	39	57	1.462
798.2	399.1	399.1	199.6	266.1	133.0	199.6	99.8	**3.76**	35	90	2.571	28	56	2.000	39	57	1.462
886.4	443.2	443.2	221.6	295.5	147.7	221.6	110.8	**3.38**	38	88	2.316	28	56	2.000	39	57	1.462
977.4	488.7	488.7	244.4	325.8	162.9	244.4	122.2	**3.07**	40	84	2.100	28	56	2.000	39	57	1.462
1076.4	538.2	538.2	269.1	358.8	179.4	269.1	134.5	**2.79**	43	82	1.907	28	56	2.000	39	57	1.462
1169.2	584.6	584.6	292.3	389.7	194.9	292.3	146.2	**2.57**	45	79	1.756	28	56	2.000	39	57	1.462
1296.4	648.2	648.2	324.1	432.1	216.1	324.1	162.0	**2.31**	48	76	1.583	28	56	2.000	39	57	1.462

ECR35

BOTH SHAFTS SAME SPEED

OUTPUT SPEEDS (NOMINAL)								OUTPUT	FIRST PAIR			TRANSVERSE PAIR			THIRD PAIR		
3000		1500		1000		750		RATIO	PINION	WHEEL	RATIO:1	PINION	WHEEL	RATIO:1	PINION	WHEEL	RATIO:1
119.0	119.0	59.5	59.5	39.7	39.7	29.8	29.8	**25.20**	15	70	4.667	42	42	1.000	15	81	5.400
136.9	136.9	68.4	68.4	45.6	45.6	34.2	34.2	**21.92**	17	69	4.059	42	42	1.000	15	81	5.400
155.2	155.2	77.6	77.6	51.7	51.7	38.8	38.8	**19.33**	19	68	3.579	42	42	1.000	15	81	5.400
173.6	173.6	86.8	86.8	57.9	57.9	43.4	43.4	**17.28**	20	64	3.200	42	42	1.000	15	81	5.400
194.0	194.0	97.0	97.0	64.7	64.7	48.5	48.5	**15.46**	22	63	2.864	42	42	1.000	15	81	5.400
202.5	202.5	101.3	101.3	67.5	67.5	50.6	50.6	**14.81**	15	70	4.667	42	42	1.000	23	73	3.174
215.1	215.1	107.5	107.5	71.7	71.7	53.8	53.8	**13.95**	24	62	2.583	42	42	1.000	15	81	5.400
232.9	232.9	116.4	116.4	77.6	77.6	58.2	58.2	**12.88**	17	69	4.059	42	42	1.000	23	73	3.174
240.7	240.7	120.4	120.4	80.2	80.2	60.2	60.2	**12.46**	26	60	2.308	42	42	1.000	15	81	5.400
263.7	263.7	131.8	131.8	87.9	87.9	65.9	65.9	**11.38**	28	59	2.107	42	42	1.000	15	81	5.400
264.1	264.1	132.1	132.1	88.0	88.0	66.0	66.0	**11.36**	19	68	3.579	42	42	1.000	23	73	3.174
292.4	292.4	146.2	146.2	97.5	97.5	73.1	73.1	**10.26**	30	57	1.900	42	42	1.000	15	81	5.400
295.4	295.4	147.7	147.7	98.5	98.5	73.8	73.8	**10.16**	20	64	3.200	42	42	1.000	23	73	3.174
318.9	318.9	159.5	159.5	106.3	106.3	79.7	79.7	**9.41**	31	54	1.742	42	42	1.000	15	81	5.400
330.1	330.1	165.0	165.0	110.0	110.0	82.5	82.5	**9.09**	22	63	2.864	42	42	1.000	23	73	3.174
348.6	348.6	174.3	174.3	116.2	116.2	87.1	87.1	**8.61**	32	51	1.594	42	42	1.000	15	81	5.400
365.9	365.9	182.9	182.9	122.0	122.0	91.5	91.5	**8.20**	24	62	2.583	42	42	1.000	23	73	3.174
409.6	409.6	204.8	204.8	136.5	136.5	102.4	102.4	**7.32**	26	60	2.308	42	42	1.000	23	73	3.174
439.8	439.8	219.9	219.9	146.6	146.6	110.0	110.0	**6.82**	15	70	4.667	42	42	1.000	39	57	1.462
448.6	448.6	224.3	224.3	149.5	149.5	112.1	112.1	**6.69**	28	59	2.107	42	42	1.000	23	73	3.174
497.5	497.5	248.7	248.7	165.8	165.8	124.4	124.4	**6.03**	30	57	1.900	42	42	1.000	23	73	3.174
505.7	505.7	252.9	252.9	168.6	168.6	126.4	126.4	**5.93**	17	69	4.059	42	42	1.000	39	57	1.462
542.6	542.6	271.3	271.3	180.9	180.9	135.7	135.7	**5.53**	31	54	1.742	42	42	1.000	23	73	3.174
573.5	573.5	286.8	286.8	191.2	191.2	143.4	143.4	**5.23**	19	68	3.579	42	42	1.000	39	57	1.462
593.1	593.1	296.5	296.5	197.7	197.7	148.3	148.3	**5.06**	32	51	1.594	42	42	1.000	23	73	3.174
641.4	641.4	320.7	320.7	213.8	213.8	160.4	160.4	**4.68**	20	64	3.200	42	42	1.000	39	57	1.462
716.8	716.8	358.4	358.4	238.9	238.9	179.2	179.2	**4.19**	22	63	2.864	42	42	1.000	39	57	1.462
794.6	794.6	397.3	397.3	264.9	264.9	198.6	198.6	**3.78**	24	62	2.583	42	42	1.000	39	57	1.462
889.5	889.5	444.7	444.7	296.5	296.5	222.4	222.4	**3.37**	26	60	2.308	42	42	1.000	39	57	1.462
974.1	974.1	487.1	487.1	324.7	324.7	243.5	243.5	**3.08**	28	59	2.107	42	42	1.000	39	57	1.462
1080.3	1080.3	540.2	540.2	360.1	360.1	270.1	270.1	**2.78**	30	57	1.900	42	42	1.000	39	57	1.462
1178.4	1178.4	589.2	589.2	392.8	392.8	294.6	294.6	**2.55**	31	54	1.742	42	42	1.000	39	57	1.462
1287.9	1287.9	644.0	644.0	429.3	429.3	322.0	322.0	**2.33**	32	51	1.594	42	42	1.000	39	57	1.462

INNER SHAFT TWICE OUTER SHAFT SPEED

OUTPUT SPEEDS (NOMINAL)								OUTPUT	FIRST PAIR			TRANSVERSE PAIR			THIRD PAIR		
3000		1500		1000		750		RATIO	PINION	WHEEL	RATIO:1	PINION	WHEEL	RATIO:1	PINION	WHEEL	RATIO:1
119.0	59.5	59.5	29.8	39.7	19.8	29.8	14.9	**25.20**	15	70	4.667	28	56	2.000	15	81	5.400
136.9	68.4	68.4	34.2	45.6	22.8	34.2	17.1	**21.92**	17	69	4.059	28	56	2.000	15	81	5.400
155.2	77.6	77.6	38.8	51.7	25.9	38.8	19.4	**19.33**	19	68	3.579	28	56	2.000	15	81	5.400
173.6	86.8	86.8	43.4	57.9	28.9	43.4	21.7	**17.28**	20	64	3.200	28	56	2.000	15	81	5.400
194.0	97.0	97.0	48.5	64.7	32.3	48.5	24.3	**15.46**	22	63	2.864	28	56	2.000	15	81	5.400
202.5	101.3	101.3	50.6	67.5	33.8	50.6	25.3	**14.81**	15	70	4.667	28	56	2.000	23	73	3.174
215.1	107.5	107.5	53.8	71.7	35.8	53.8	26.9	**13.95**	24	62	2.583	28	56	2.000	15	81	5.400
232.9	116.4	116.4	58.2	77.6	38.8	58.2	29.1	**12.88**	17	69	4.059	28	56	2.000	23	73	3.174
240.7	120.4	120.4	60.2	80.2	40.1	60.2	30.1	**12.46**	26	60	2.308	28	56	2.000	15	81	5.400
263.7	131.8	131.8	65.9	87.9	43.9	65.9	33.0	**11.38**	28	59	2.107	28	56	2.000	15	81	5.400
264.1	132.1	132.1	66.0	88.0	44.0	66.0	33.0	**11.36**	19	68	3.579	28	56	2.000	23	73	3.174
292.4	146.2	146.2	73.1	97.5	48.7	73.1	36.5	**10.26**	30	57	1.900	28	56	2.000	15	81	5.400
295.4	147.7	147.7	73.8	98.5	49.2	73.8	36.9	**10.16**	20	64	3.200	28	56	2.000	23	73	3.174
318.9	159.5	159.5	79.7	106.3	53.2	79.7	39.9	**9.41**	31	54	1.742	28	56	2.000	15	81	5.400
330.1	165.0	165.0	82.5	110.0	55.0	82.5	41.3	**9.09**	22	63	2.864	28	56	2.000	23	73	3.174
348.6	174.3	174.3	87.1	116.2	58.1	87.1	43.6	**8.61**	32	51	1.594	28	56	2.000	15	81	5.400
365.9	182.9	182.9	91.5	122.0	61.0	91.5	45.7	**8.20**	24	62	2.583	28	56	2.000	23	73	3.174
409.6	204.8	204.8	102.4	136.5	68.3	102.4	51.2	**7.32**	26	60	2.308	28	56	2.000	23	73	3.174
439.8	219.9	219.9	110.0	146.6	73.3	110.0	55.0	**6.82**	15	70	4.667	28	56	2.000	39	57	1.462
448.6	224.3	224.3	112.1	149.5	74.8	112.1	56.1	**6.69**	28	59	2.107	28	56	2.000	23	73	3.174
497.5	248.7	248.7	124.4	165.8	82.9	124.4	62.2	**6.03**	30	57	1.900	28	56	2.000	23	73	3.174
505.7	252.9	252.9	126.4	168.6	84.3	126.4	63.2	**5.93**	17	69	4.059	28	56	2.000	39	57	1.462
542.6	271.3	271.3	135.7	180.9	90.4	135.7	67.8	**5.53**	31	54	1.742	28	56	2.000	23	73	3.174
573.5	286.8	286.8	143.4	191.2	95.6	143.4	71.7	**5.23**	19	68	3.579	28	56	2.000	39	57	1.462
593.1	296.5	296.5	148.3	197.7	98.8	148.3	74.1	**5.06**	32	51	1.594	28	56	2.000	23	73	3.174
641.4	320.7	320.7	160.4	213.8	106.9	160.4	80.2	**4.68**	20	64	3.200	28	56	2.000	39	57	1.462
716.8	358.4	358.4	179.2	238.9	119.5	179.2	89.6	**4.19**	22	63	2.864	28	56	2.000	39	57	1.462
794.6	397.3	397.3	198.6	264.9	132.4	198.6	99.3	**3.78**	24	62	2.583	28	56	2.000	39	57	1.462
889.5	444.7	444.7	222.4	296.5	148.2	222.4	111.2	**3.37**	26	60	2.308	28	56	2.000	39	57	1.462
974.1	487.1	487.1	243.5	324.7	162.4	243.5	121.8	**3.08**	28	59	2.107	28	56	2.000	39	57	1.462
1080.3	540.2	540.2	270.1	360.1	180.1	270.1	135.0	**2.78**	30	57	1.900	28	56	2.000	39	57	1.462
1178.4	589.2	589.2	294.6	392.8	196.4	294.6	147.3	**2.55**	31	54	1.742	28	56	2.000	39	57	1.462
1287.9	644.0	644.0	322.0	429.3	214.7	322.0	161.0	**2.33**	32	51	1.594	28	56	2.000	39	57	1.462

ECR4

BOTH SHAFTS SAME SPEED

OUTPUT SPEEDS (NOMINAL)								OUTPUT	FIRST PAIR			TRANSVERSE PAIR			THIRD PAIR		
3000		1500		1000		750		RATIO	PINION	WHEEL	RATIO:1	PINION	WHEEL	RATIO:1	PINION	WHEEL	RATIO:1
119.0	119.0	59.5	59.5	39.7	39.7	29.8	29.8	**25.20**	15	70	4.667	42	42	1.000	15	81	5.400
136.9	136.9	68.4	68.4	45.6	45.6	34.2	34.2	**21.92**	17	69	4.059	42	42	1.000	15	81	5.400
155.2	155.2	77.6	77.6	51.7	51.7	38.8	38.8	**19.33**	19	68	3.579	42	42	1.000	15	81	5.400
173.6	173.6	86.8	86.8	57.9	57.9	43.4	43.4	**17.28**	20	64	3.200	42	42	1.000	15	81	5.400
194.0	194.0	97.0	97.0	64.7	64.7	48.5	48.5	**15.46**	22	63	2.864	42	42	1.000	15	81	5.400
202.5	202.5	101.3	101.3	67.5	67.5	50.6	50.6	**14.81**	15	70	4.667	42	42	1.000	23	73	3.174
215.1	215.1	107.5	107.5	71.7	71.7	53.8	53.8	**13.95**	24	62	2.583	42	42	1.000	15	81	5.400
232.9	232.9	116.4	116.4	77.6	77.6	58.2	58.2	**12.88**	17	69	4.059	42	42	1.000	23	73	3.174
240.7	240.7	120.4	120.4	80.2	80.2	60.2	60.2	**12.46**	26	60	2.308	42	42	1.000	15	81	5.400
263.7	263.7	131.8	131.8	87.9	87.9	65.9	65.9	**11.38**	28	59	2.107	42	42	1.000	15	81	5.400
264.1	264.1	132.1	132.1	88.0	88.0	66.0	66.0	**11.36**	19	68	3.579	42	42	1.000	23	73	3.174
292.4	292.4	146.2	146.2	97.5	97.5	73.1	73.1	**10.26**	30	57	1.900	42	42	1.000	15	81	5.400
295.4	295.4	147.7	147.7	98.5	98.5	73.8	73.8	**10.16**	20	64	3.200	42	42	1.000	23	73	3.174
318.9	318.9	159.5	159.5	106.3	106.3	79.7	79.7	**9.41**	31	54	1.742	42	42	1.000	15	81	5.400
330.1	330.1	165.0	165.0	110.0	110.0	82.5	82.5	**9.09**	22	63	2.864	42	42	1.000	23	73	3.174
348.6	348.6	174.3	174.3	116.2	116.2	87.1	87.1	**8.61**	32	51	1.594	42	42	1.000	15	81	5.400
365.9	365.9	182.9	182.9	122.0	122.0	91.5	91.5	**8.20**	24	62	2.583	42	42	1.000	23	73	3.174
409.6	409.6	204.8	204.8	136.5	136.5	102.4	102.4	**7.32**	26	60	2.308	42	42	1.000	23	73	3.174
439.8	439.8	219.9	219.9	146.6	146.6	110.0	110.0	**6.82**	15	70	4.667	42	42	1.000	39	57	1.462
448.6	448.6	224.3	224.3	149.5	149.5	112.1	112.1	**6.69**	28	59	2.107	42	42	1.000	23	73	3.174
497.5	497.5	248.7	248.7	165.8	165.8	124.4	124.4	**6.03**	30	57	1.900	42	42	1.000	23	73	3.174
505.7	505.7	252.9	252.9	168.6	168.6	126.4	126.4	**5.93**	17	69	4.059	42	42	1.000	39	57	1.462
542.6	542.6	271.3	271.3	180.9	180.9	135.7	135.7	**5.53**	31	54	1.742	42	42	1.000	23	73	3.174
573.5	573.5	286.8	286.8	191.2	191.2	143.4	143.4	**5.23**	19	68	3.579	42	42	1.000	39	57	1.462
593.1	593.1	296.5	296.5	197.7	197.7	148.3	148.3	**5.06**	32	51	1.594	42	42	1.000	23	73	3.174
641.4	641.4	320.7	320.7	213.8	213.8	160.4	160.4	**4.68**	20	64	3.200	42	42	1.000	39	57	1.462
716.8	716.8	358.4	358.4	238.9	238.9	179.2	179.2	**4.19**	22	63	2.864	42	42	1.000	39	57	1.462
794.6	794.6	397.3	397.3	264.9	264.9	198.6	198.6	**3.78**	24	62	2.583	42	42	1.000	39	57	1.462
889.5	889.5	444.7	444.7	296.5	296.5	222.4	222.4	**3.37**	26	60	2.308	42	42	1.000	39	57	1.462
974.1	974.1	487.1	487.1	324.7	324.7	243.5	243.5	**3.08**	28	59	2.107	42	42	1.000	39	57	1.462
1080.3	1080.3	540.2	540.2	360.1	360.1	270.1	270.1	**2.78**	30	57	1.900	42	42	1.000	39	57	1.462
1178.4	1178.4	589.2	589.2	392.8	392.8	294.6	294.6	**2.55**	31	54	1.742	42	42	1.000	39	57	1.462
1287.9	1287.9	644.0	644.0	429.3	429.3	322.0	322.0	**2.33**	32	51	1.594	42	42	1.000	39	57	1.462

INNER SHAFT TWICE OUTER SHAFT SPEED

OUTPUT SPEEDS (NOMINAL)								OUTPUT	FIRST PAIR			TRANSVERSE PAIR			THIRD PAIR		
3000		1500		1000		750		RATIO	PINION	WHEEL	RATIO:1	PINION	WHEEL	RATIO:1	PINION	WHEEL	RATIO:1
119.0	59.5	59.5	29.8	39.7	19.8	29.8	14.9	**25.20**	15	70	4.667	28	56	2.000	15	81	5.400
136.9	68.4	68.4	34.2	45.6	22.8	34.2	17.1	**21.92**	17	69	4.059	28	56	2.000	15	81	5.400
155.2	77.6	77.6	38.8	51.7	25.9	38.8	19.4	**19.33**	19	68	3.579	28	56	2.000	15	81	5.400
173.6	86.8	86.8	43.4	57.9	28.9	43.4	21.7	**17.28**	20	64	3.200	28	56	2.000	15	81	5.400
194.0	97.0	97.0	48.5	64.7	32.3	48.5	24.3	**15.46**	22	63	2.864	28	56	2.000	15	81	5.400
202.5	101.3	101.3	50.6	67.5	33.8	50.6	25.3	**14.81**	15	70	4.667	28	56	2.000	23	73	3.174
215.1	107.5	107.5	53.8	71.7	35.8	53.8	26.9	**13.95**	24	62	2.583	28	56	2.000	15	81	5.400
232.9	116.4	116.4	58.2	77.6	38.8	58.2	29.1	**12.88**	17	69	4.059	28	56	2.000	23	73	3.174
240.7	120.4	120.4	60.2	80.2	40.1	60.2	30.1	**12.46**	26	60	2.308	28	56	2.000	15	81	5.400
263.7	131.8	131.8	65.9	87.9	43.9	65.9	33.0	**11.38**	28	59	2.107	28	56	2.000	15	81	5.400
264.1	132.1	132.1	66.0	88.0	44.0	66.0	33.0	**11.36**	19	68	3.579	28	56	2.000	23	73	3.174
292.4	146.2	146.2	73.1	97.5	48.7	73.1	36.5	**10.26**	30	57	1.900	28	56	2.000	15	81	5.400
295.4	147.7	147.7	73.8	98.5	49.2	73.8	36.9	**10.16**	20	64	3.200	28	56	2.000	23	73	3.174
318.9	159.5	159.5	79.7	106.3	53.2	79.7	39.9	**9.41**	31	54	1.742	28	56	2.000	15	81	5.400
330.1	165.0	165.0	82.5	110.0	55.0	82.5	41.3	**9.09**	22	63	2.864	28	56	2.000	23	73	3.174
348.6	174.3	174.3	87.1	116.2	58.1	87.1	43.6	**8.61**	32	51	1.594	28	56	2.000	15	81	5.400
365.9	182.9	182.9	91.5	122.0	61.0	91.5	45.7	**8.20**	24	62	2.583	28	56	2.000	23	73	3.174
409.6	204.8	204.8	102.4	136.5	68.3	102.4	51.2	**7.32**	26	60	2.308	28	56	2.000	23	73	3.174
439.8	219.9	219.9	110.0	146.6	73.3	110.0	55.0	**6.82**	15	70	4.667	28	56	2.000	39	57	1.462
448.6	224.3	224.3	112.1	149.5	74.8	112.1	56.1	**6.69**	28	59	2.107	28	56	2.000	23	73	3.174
497.5	248.7	248.7	124.4	165.8	82.9	124.4	62.2	**6.03**	30	57	1.900	28	56	2.000	23	73	3.174
505.7	252.9	252.9	126.4	168.6	84.3	126.4	63.2	**5.93**	17	69	4.059	28	56	2.000	39	57	1.462
542.6	271.3	271.3	135.7	180.9	90.4	135.7	67.8	**5.53**	31	54	1.742	28	56	2.000	23	73	3.174
573.5	286.8	286.8	143.4	191.2	95.6	143.4	71.7	**5.23**	19	68	3.579	28	56	2.000	39	57	1.462
593.1	296.5	296.5	148.3	197.7	98.8	148.3	74.1	**5.06**	32	51	1.594	28	56	2.000	23	73	3.174
641.4	320.7	320.7	160.4	213.8	106.9	160.4	80.2	**4.68**	20	64	3.200	28	56	2.000	39	57	1.462
716.8	358.4	358.4	179.2	238.9	119.5	179.2	89.6	**4.19**	22	63	2.864	28	56	2.000	39	57	1.462
794.6	397.3	397.3	198.6	264.9	132.4	198.6	99.3	**3.78**	24	62	2.583	28	56	2.000	39	57	1.462
889.5	444.7	444.7	222.4	296.5	148.2	222.4	111.2	**3.37**	26	60	2.308	28	56	2.000	39	57	1.462
974.1	487.1	487.1	243.5	324.7	162.4	243.5	121.8	**3.08**	28	59	2.107	28	56	2.000	39	57	1.462
1080.3	540.2	540.2	270.1	360.1	180.1	270.1	135.0	**2.78**	30	57	1.900	28	56	2.000	39	57	1.462
1178.4	589.2	589.2	294.6	392.8	196.4	294.6	147.3	**2.55**	31	54	1.742	28	56	2.000	39	57	1.462
1287.9	644.0	644.0	322.0	429.3	214.7	322.0	161.0	**2.33**	32	51	1.594	28	56	2.000	39	57	1.462

ECR425

BOTH SHAFT SAME SPEED

OUTPUT SPEEDS (NOMINAL)								OUTPUT	FIRST PAIR			TRANSVERSE PAIR			THIRD PAIR		
3000		1500		1000		750		RATIO	PINION	WHEEL	RATIO:1	PINION	WHEEL	RATIO:1	PINION	WHEEL	RATIO:1
117.3	117.3	58.6	58.6	39.1	39.1	29.3	29.3	**25.58**	18	82	4.556	42	42	1.000	13	73	5.615
119.5	119.5	59.8	59.8	39.8	39.8	29.9	29.9	**25.10**	17	76	4.471	42	42	1.000	13	73	5.615
124.6	124.6	62.3	62.3	41.5	41.5	31.1	31.1	**24.08**	18	82	4.556	42	42	1.000	14	74	5.286
125.3	125.3	62.7	62.7	41.8	41.8	31.3	31.3	**23.94**	19	81	4.263	42	42	1.000	13	73	5.615
127.0	127.0	63.5	63.5	42.3	42.3	31.7	31.7	**23.63**	17	76	4.471	42	42	1.000	14	74	5.286
133.1	133.1	66.6	66.6	44.4	44.4	33.3	33.3	**22.53**	19	81	4.263	42	42	1.000	14	74	5.286
133.6	133.6	66.8	66.8	44.5	44.5	33.4	33.4	**22.46**	20	80	4.000	42	42	1.000	13	73	5.615
141.9	141.9	70.9	70.9	47.3	47.3	35.5	35.5	**21.14**	20	80	4.000	42	42	1.000	14	74	5.286
149.6	149.6	74.8	74.8	49.9	49.9	37.4	37.4	**20.05**	21	75	3.571	42	42	1.000	13	73	5.615
158.9	158.9	79.5	79.5	53.0	53.0	39.7	39.7	**18.88**	21	75	3.571	42	42	1.000	14	74	5.286
161.0	161.0	80.5	80.5	53.7	53.7	40.3	40.3	**18.63**	22	73	3.318	42	42	1.000	13	73	5.615
166.0	166.0	83.0	83.0	55.3	55.3	41.5	41.5	**18.07**	23	74	3.217	42	42	1.000	13	73	5.615
171.0	171.0	85.5	85.5	57.0	57.0	42.8	42.8	**17.54**	22	73	3.318	42	42	1.000	14	74	5.286
176.4	176.4	88.2	88.2	58.8	58.8	44.1	44.1	**17.01**	23	74	3.217	42	42	1.000	14	74	5.286
180.6	180.6	90.3	90.3	60.2	60.2	45.1	45.1	**16.61**	24	71	2.958	42	42	1.000	13	73	5.615
183.0	183.0	91.5	91.5	61.0	61.0	45.7	45.7	**16.40**	25	73	2.920	42	42	1.000	13	73	5.615
191.9	191.9	95.9	95.9	64.0	64.0	48.0	48.0	**15.64**	24	71	2.958	42	42	1.000	14	74	5.286
194.4	194.4	97.2	97.2	64.8	64.8	48.6	48.6	**15.43**	25	73	2.920	42	42	1.000	14	74	5.286
198.4	198.4	99.2	99.2	66.1	66.1	49.6	49.6	**15.12**	26	70	2.692	42	42	1.000	13	73	5.615
207.8	207.8	103.9	103.9	69.3	69.3	51.9	51.9	**14.44**	28	72	2.571	42	42	1.000	13	73	5.615
210.8	210.8	105.4	105.4	70.3	70.3	52.7	52.7	**14.23**	26	70	2.692	42	42	1.000	14	74	5.286
212.8	212.8	106.4	106.4	70.9	70.9	53.2	53.2	**14.10**	18	82	4.556	42	42	1.000	21	65	3.095
215.3	215.3	107.6	107.6	71.8	71.8	53.8	53.8	**13.93**	27	67	2.481	42	42	1.000	13	73	5.615
216.8	216.8	108.4	108.4	72.3	72.3	54.2	54.2	**13.84**	17	76	4.471	42	42	1.000	21	65	3.095
220.7	220.7	110.4	110.4	73.6	73.6	55.2	55.2	**13.59**	28	72	2.571	42	42	1.000	14	74	5.286
224.5	224.5	112.3	112.3	74.8	74.8	56.1	56.1	**13.36**	29	69	2.379	42	42	1.000	13	73	5.615
227.4	227.4	113.7	113.7	75.8	75.8	56.8	56.8	**13.20**	19	81	4.263	42	42	1.000	21	65	3.095
228.7	228.7	114.4	114.4	76.2	76.2	57.2	57.2	**13.12**	27	67	2.481	42	42	1.000	14	74	5.286
238.5	238.5	119.3	119.3	79.5	79.5	59.6	59.6	**12.58**	29	69	2.379	42	42	1.000	14	74	5.286
242.3	242.3	121.2	121.2	80.8	80.8	60.6	60.6	**12.38**	20	80	4.000	42	42	1.000	21	65	3.095
250.4	250.4	125.2	125.2	83.5	83.5	62.6	62.6	**11.98**	30	64	2.133	42	42	1.000	13	73	5.615
266.0	266.0	133.0	133.0	88.7	88.7	66.5	66.5	**11.28**	30	64	2.133	42	42	1.000	14	74	5.286
267.1	267.1	133.6	133.6	89.0	89.0	66.8	66.8	**11.23**	31	62	2.000	42	42	1.000	13	73	5.615
271.4	271.4	135.7	135.7	90.5	90.5	67.8	67.8	**11.05**	21	75	3.571	42	42	1.000	21	65	3.095
279.5	279.5	139.7	139.7	93.2	93.2	69.9	69.9	**10.74**	34	65	1.912	42	42	1.000	13	73	5.615
283.8	283.8	141.9	141.9	94.6	94.6	70.9	70.9	**10.57**	31	62	2.000	42	42	1.000	14	74	5.286
292.1	292.1	146.0	146.0	97.4	97.4	73.0	73.0	**10.27**	22	73	3.318	42	42	1.000	21	65	3.095
294.8	294.8	147.4	147.4	98.3	98.3	73.7	73.7	**10.18**	32	58	1.813	42	42	1.000	13	73	5.615
296.9	296.9	148.4	148.4	99.0	99.0	74.2	74.2	**10.11**	34	65	1.912	42	42	1.000	14	74	5.286
301.2	301.2	150.6	150.6	100.4	100.4	75.3	75.3	**9.96**	23	74	3.217	42	42	1.000	21	65	3.095
313.1	313.1	156.6	156.6	104.4	104.4	78.3	78.3	**9.58**	32	58	1.813	42	42	1.000	14	74	5.286
313.8	313.8	156.9	156.9	104.6	104.6	78.4	78.4	**9.56**	37	63	1.703	42	42	1.000	13	73	5.615
315.3	315.3	157.6	157.6	105.1	105.1	78.8	78.8	**9.51**	36	61	1.694	42	42	1.000	13	73	5.615
327.6	327.6	163.8	163.8	109.2	109.2	81.9	81.9	**9.16**	24	71	2.958	42	42	1.000	21	65	3.095
328.0	328.0	164.0	164.0	109.3	109.3	82.0	82.0	**9.15**	35	57	1.629	42	42	1.000	13	73	5.615
331.9	331.9	166.0	166.0	110.6	110.6	83.0	83.0	**9.04**	25	73	2.920	42	42	1.000	21	65	3.095
333.3	333.3	166.7	166.7	111.1	111.1	83.3	83.3	**9.00**	37	63	1.703	42	42	1.000	14	74	5.286
335.0	335.0	167.5	167.5	111.7	111.7	83.7	83.7	**8.96**	36	61	1.694	42	42	1.000	14	74	5.286
347.3	347.3	173.6	173.6	115.8	115.8	86.8	86.8	**8.64**	39	60	1.538	42	42	1.000	13	73	5.615
348.5	348.5	174.3	174.3	116.2	116.2	87.1	87.1	**8.61**	35	57	1.629	42	42	1.000	14	74	5.286
352.8	352.8	176.4	176.4	117.6	117.6	88.2	88.2	**8.50**	18	82	4.556	42	42	1.000	30	56	1.867
359.5	359.5	179.7	179.7	119.8	119.8	89.9	89.9	**8.35**	17	76	4.471	42	42	1.000	30	56	1.867
360.0	360.0	180.0	180.0	120.0	120.0	90.0	90.0	**8.33**	26	70	2.692	42	42	1.000	21	65	3.095
368.9	368.9	184.5	184.5	123.0	123.0	92.2	92.2	**8.13**	39	60	1.538	42	42	1.000	14	74	5.286
376.9	376.9	188.5	188.5	125.6	125.6	94.2	94.2	**7.96**	28	72	2.571	42	42	1.000	21	65	3.095
377.0	377.0	188.5	188.5	125.7	125.7	94.2	94.2	**7.96**	19	81	4.263	42	42	1.000	30	56	1.867
381.6	381.6	190.8	190.8	127.2	127.2	95.4	95.4	**7.86**	40	56	1.400	42	42	1.000	13	73	5.615
390.6	390.6	195.3	195.3	130.2	130.2	97.6	97.6	**7.68**	27	67	2.481	42	42	1.000	21	65	3.095
393.7	393.7	196.8	196.8	131.2	131.2	98.4	98.4	**7.62**	42	57	1.357	42	42	1.000	13	73	5.615
401.8	401.8	200.9	200.9	133.9	133.9	100.4	100.4	**7.47**	20	80	4.000	42	42	1.000	30	56	1.867
405.4	405.4	202.7	202.7	135.1	135.1	101.4	101.4	**7.40**	40	56	1.400	42	42	1.000	14	74	5.286
407.4	407.4	203.7	203.7	135.8	135.8	101.8	101.8	**7.36**	29	69	2.379	42	42	1.000	21	65	3.095
418.2	418.2	209.1	209.1	139.4	139.4	104.6	104.6	**7.17**	42	57	1.357	42	42	1.000	14	74	5.286
421.2	421.2	210.6	210.6	140.4	140.4	105.3	105.3	**7.12**	41	52	1.268	42	42	1.000	13	73	5.615
433.4	433.4	216.7	216.7	144.5	144.5	108.4	108.4	**6.92**	43	53	1.233	42	42	1.000	13	73	5.615
447.5	447.5	223.8	223.8	149.2	149.2	111.9	111.9	**6.70**	41	52	1.268	42	42	1.000	14	74	5.286
450.0	450.0	225.0	225.0	150.0	150.0	112.5	112.5	**6.67**	21	75	3.571	42	42	1.000	30	56	1.867
454.3	454.3	227.2	227.2	151.4	151.4	113.6	113.6	**6.60**	30	64	2.133	42	42	1.000	21	65	3.095
460.5	460.5	230.2	230.2	153.5	153.5	115.1	115.1	**6.51**	43	53	1.233	42	42	1.000	14	74	5.286
484.3	484.3	242.2	242.2	161.4	161.4	121.1	121.1	**6.19**	22	73	3.318	42	42	1.000	30	56	1.867
484.6	484.6	242.3	242.3	161.5	161.5	121.2	121.2	**6.19**	31	62	2.000	42	42	1.000	21	65	3.095
499.5	499.5	249.8	249.8	166.5	166.5	124.9	124.9	**6.01**	23	74	3.217	42	42	1.000	30	56	1.867
507.0	507.0	253.5	253.5	169.0	169.0	126.7	126.7	**5.92**	34	65	1.912	42	42	1.000	21	65	3.095
534.7	534.7	267.4	267.4	178.2	178.2	133.7	133.7	**5.61**	32	58	1.813	42	42	1.000	21	65	3.095

543.3	543.3	271.6	271.6	181.1	181.1	135.8	135.8	**5.52**	24	71	2.958	42	42	1.000	30	56	1.867
550.4	550.4	275.2	275.2	183.5	183.5	137.6	137.6	**5.45**	25	73	2.920	42	42	1.000	30	56	1.867
569.2	569.2	284.6	284.6	189.7	189.7	142.3	142.3	**5.27**	37	63	1.703	42	42	1.000	21	65	3.095
572.0	572.0	286.0	286.0	190.7	190.7	143.0	143.0	**5.24**	36	61	1.694	42	42	1.000	21	65	3.095
595.1	595.1	297.6	297.6	198.4	198.4	148.8	148.8	**5.04**	35	57	1.629	42	42	1.000	21	65	3.095
596.9	596.9	298.5	298.5	199.0	199.0	149.2	149.2	**5.03**	26	70	2.692	42	42	1.000	30	56	1.867
625.0	625.0	312.5	312.5	208.3	208.3	156.3	156.3	**4.80**	28	72	2.571	42	42	1.000	30	56	1.867
630.0	630.0	315.0	315.0	210.0	210.0	157.5	157.5	**4.76**	39	60	1.538	42	42	1.000	21	65	3.095
647.7	647.7	323.8	323.8	215.9	215.9	161.9	161.9	**4.63**	27	67	2.481	42	42	1.000	30	56	1.867
675.5	675.5	337.7	337.7	225.2	225.2	168.9	168.9	**4.44**	29	69	2.379	42	42	1.000	30	56	1.867
692.3	692.3	346.2	346.2	230.8	230.8	173.1	173.1	**4.33**	40	56	1.400	42	42	1.000	21	65	3.095
714.2	714.2	357.1	357.1	238.1	238.1	178.5	178.5	**4.20**	42	57	1.357	42	42	1.000	21	65	3.095
753.3	753.3	376.7	376.7	251.1	251.1	188.3	188.3	**3.98**	30	64	2.133	42	42	1.000	30	56	1.867
764.2	764.2	382.1	382.1	254.7	254.7	191.1	191.1	**3.93**	41	52	1.268	42	42	1.000	21	65	3.095
786.4	786.4	393.2	393.2	262.1	262.1	196.6	196.6	**3.82**	43	53	1.233	42	42	1.000	21	65	3.095
803.6	803.6	401.8	401.8	267.9	267.9	200.9	200.9	**3.73**	31	62	2.000	42	42	1.000	30	56	1.867
840.7	840.7	420.3	420.3	280.2	280.2	210.2	210.2	**3.57**	34	65	1.912	42	42	1.000	30	56	1.867
886.7	886.7	443.3	443.3	295.6	295.6	221.7	221.7	**3.38**	32	58	1.813	42	42	1.000	30	56	1.867
943.9	943.9	471.9	471.9	314.6	314.6	236.0	236.0	**3.18**	37	63	1.703	42	42	1.000	30	56	1.867
948.5	948.5	474.2	474.2	316.2	316.2	237.1	237.1	**3.16**	36	61	1.694	42	42	1.000	30	56	1.867
986.8	986.8	493.4	493.4	328.9	328.9	246.7	246.7	**3.04**	35	57	1.629	42	42	1.000	30	56	1.867
1044.6	1044.6	522.3	522.3	348.2	348.2	261.2	261.2	**2.87**	39	60	1.538	42	42	1.000	30	56	1.867
1148.0	1148.0	574.0	574.0	382.7	382.7	287.0	287.0	**2.61**	40	56	1.400	42	42	1.000	30	56	1.867
1184.2	1184.2	592.1	592.1	394.7	394.7	296.1	296.1	**2.53**	42	57	1.357	42	42	1.000	30	56	1.867
1267.2	1267.2	633.6	633.6	422.4	422.4	316.8	316.8	**2.37**	41	52	1.268	42	42	1.000	30	56	1.867
1303.9	1303.9	652.0	652.0	434.6	434.6	326.0	326.0	**2.30**	43	53	1.233	42	42	1.000	30	56	1.867

INNER SHAFT TWICE OUTER SHAFT SPEED

OUTPUT SPEEDS (NOMINAL)								**OUTPUT**	FIRST PAIR			TRANSVERSE PAIR			THIRD PAIR		
3000		1500		1000		750		**RATIO**	PINION	WHEEL	RATIO:1	PINION	WHEEL	RATIO:1	PINION	WHEEL	RATIO:1
117.3	58.6	58.6	29.3	39.1	19.5	29.3	14.7	**25.58**	18	82	4.556	28	56	2.000	13	73	5.615
119.5	59.8	59.8	29.9	39.8	19.9	29.9	14.9	**25.10**	17	76	4.471	28	56	2.000	13	73	5.615
124.6	62.3	62.3	31.1	41.5	20.8	31.1	15.6	**24.08**	18	82	4.556	28	56	2.000	14	74	5.286
125.3	62.7	62.7	31.3	41.8	20.9	31.3	15.7	**23.94**	19	81	4.263	28	56	2.000	13	73	5.615
127.0	63.5	63.5	31.7	42.3	21.2	31.7	15.9	**23.63**	17	76	4.471	28	56	2.000	14	74	5.286
133.1	66.6	66.6	33.3	44.4	22.2	33.3	16.6	**22.53**	19	81	4.263	28	56	2.000	14	74	5.286
133.6	66.8	66.8	33.4	44.5	22.3	33.4	16.7	**22.46**	20	80	4.000	28	56	2.000	13	73	5.615
141.9	70.9	70.9	35.5	47.3	23.6	35.5	17.7	**21.14**	20	80	4.000	28	56	2.000	14	74	5.286
149.6	74.8	74.8	37.4	49.9	24.9	37.4	18.7	**20.05**	21	75	3.571	28	56	2.000	13	73	5.615
158.9	79.5	79.5	39.7	53.0	26.5	39.7	19.9	**18.88**	21	75	3.571	28	56	2.000	14	74	5.286
161.0	80.5	80.5	40.3	53.7	26.8	40.3	20.1	**18.63**	22	73	3.318	28	56	2.000	13	73	5.615
166.0	83.0	83.0	41.5	55.3	27.7	41.5	20.8	**18.07**	23	74	3.217	28	56	2.000	13	73	5.615
171.0	85.5	85.5	42.8	57.0	28.5	42.8	21.4	**17.54**	22	73	3.318	28	56	2.000	14	74	5.286
176.4	88.2	88.2	44.1	58.8	29.4	44.1	22.1	**17.01**	23	74	3.217	28	56	2.000	14	74	5.286
180.6	90.3	90.3	45.1	60.2	30.1	45.1	22.6	**16.61**	24	71	2.958	28	56	2.000	13	73	5.615
183.0	91.5	91.5	45.7	61.0	30.5	45.7	22.9	**16.40**	25	73	2.920	28	56	2.000	13	73	5.615
191.9	95.9	95.9	48.0	64.0	32.0	48.0	24.0	**15.64**	24	71	2.958	28	56	2.000	14	74	5.286
194.4	97.2	97.2	48.6	64.8	32.4	48.6	24.3	**15.43**	25	73	2.920	28	56	2.000	14	74	5.286
198.4	99.2	99.2	49.6	66.1	33.1	49.6	24.8	**15.12**	26	70	2.692	28	56	2.000	13	73	5.615
207.8	103.9	103.9	51.9	69.3	34.6	51.9	26.0	**14.44**	28	72	2.571	28	56	2.000	13	73	5.615
210.8	105.4	105.4	52.7	70.3	35.1	52.7	26.4	**14.23**	26	70	2.692	28	56	2.000	14	74	5.286
212.8	106.4	106.4	53.2	70.9	35.5	53.2	26.6	**14.10**	18	82	4.556	28	56	2.000	21	65	3.095
215.3	107.6	107.6	53.8	71.8	35.9	53.8	26.9	**13.93**	27	67	2.481	28	56	2.000	13	73	5.615
216.8	108.4	108.4	54.2	72.3	36.1	54.2	27.1	**13.84**	17	76	4.471	28	56	2.000	21	65	3.095
220.7	110.4	110.4	55.2	73.6	36.8	55.2	27.6	**13.59**	28	72	2.571	28	56	2.000	14	74	5.286
224.5	112.3	112.3	56.1	74.8	37.4	56.1	28.1	**13.36**	29	69	2.379	28	56	2.000	13	73	5.615
227.4	113.7	113.7	56.8	75.8	37.9	56.8	28.4	**13.20**	19	81	4.263	28	56	2.000	21	65	3.095
228.7	114.4	114.4	57.2	76.2	38.1	57.2	28.6	**13.12**	27	67	2.481	28	56	2.000	14	74	5.286
238.5	119.3	119.3	59.6	79.5	39.8	59.6	29.8	**12.58**	29	69	2.379	28	56	2.000	14	74	5.286
242.3	121.2	121.2	60.6	80.8	40.4	60.6	30.3	**12.38**	20	80	4.000	28	56	2.000	21	65	3.095
250.4	125.2	125.2	62.6	83.5	41.7	62.6	31.3	**11.98**	30	64	2.133	28	56	2.000	13	73	5.615
266.0	133.0	133.0	66.5	88.7	44.3	66.5	33.3	**11.28**	30	64	2.133	28	56	2.000	14	74	5.286
267.1	133.6	133.6	66.8	89.0	44.5	66.8	33.4	**11.23**	31	62	2.000	28	56	2.000	13	73	5.615
271.4	135.7	135.7	67.8	90.5	45.2	67.8	33.9	**11.05**	21	75	3.571	28	56	2.000	21	65	3.095
279.5	139.7	139.7	69.9	93.2	46.6	69.9	34.9	**10.74**	34	65	1.912	28	56	2.000	13	73	5.615
283.8	141.9	141.9	70.9	94.6	47.3	70.9	35.5	**10.57**	31	62	2.000	28	56	2.000	14	74	5.286
292.1	146.0	146.0	73.0	97.4	48.7	73.0	36.5	**10.27**	22	73	3.318	28	56	2.000	21	65	3.095
294.8	147.4	147.4	73.7	98.3	49.1	73.7	36.8	**10.18**	32	58	1.813	28	56	2.000	13	73	5.615
296.9	148.4	148.4	74.2	99.0	49.5	74.2	37.1	**10.11**	34	65	1.912	28	56	2.000	14	74	5.286
301.2	150.6	150.6	75.3	100.4	50.2	75.3	37.7	**9.96**	23	74	3.217	28	56	2.000	21	65	3.095
313.1	156.6	156.6	78.3	104.4	52.2	78.3	39.1	**9.58**	32	58	1.813	28	56	2.000	14	74	5.286
313.8	156.9	156.9	78.4	104.6	52.3	78.4	39.2	**9.56**	37	63	1.703	28	56	2.000	13	73	5.615
315.3	157.6	157.6	78.8	105.1	52.5	78.8	39.4	**9.51**	36	61	1.694	28	56	2.000	13	73	5.615
327.6	163.8	163.8	81.9	109.2	54.6	81.9	41.0	**9.16**	24	71	2.958	28	56	2.000	21	65	3.095
328.0	164.0	164.0	82.0	109.3	54.7	82.0	41.0	**9.15**	35	57	1.629	28	56	2.000	13	73	5.615
331.9	166.0	166.0	83.0	110.6	55.3	83.0	41.5	**9.04**	25	73	2.920	28	56	2.000	21	65	3.095
333.3	166.7	166.7	83.3	111.1	55.6	83.3	41.7	**9.00**	37	63	1.703	28	56	2.000	14	74	5.286

335.0	167.5	167.5	83.7	111.7	55.8	83.7	41.9	**8.96**	36	61	1.694	28	56	2.000	14	74	5.286
347.3	173.6	173.6	86.8	115.8	57.9	86.8	43.4	**8.64**	39	60	1.538	28	56	2.000	13	73	5.615
348.5	174.3	174.3	87.1	116.2	58.1	87.1	43.6	**8.61**	35	57	1.629	28	56	2.000	14	74	5.286
352.8	176.4	176.4	88.2	117.6	58.8	88.2	44.1	**8.50**	18	82	4.556	28	56	2.000	30	56	1.867
359.5	179.7	179.7	89.9	119.8	59.9	89.9	44.9	**8.35**	17	76	4.471	28	56	2.000	30	56	1.867
360.0	180.0	180.0	90.0	120.0	60.0	90.0	45.0	**8.33**	26	70	2.692	28	56	2.000	21	65	3.095
368.9	184.5	184.5	92.2	123.0	61.5	92.2	46.1	**8.13**	39	60	1.538	28	56	2.000	14	74	5.286
376.9	188.5	188.5	94.2	125.6	62.8	94.2	47.1	**7.96**	28	72	2.571	28	56	2.000	21	65	3.095
377.0	188.5	188.5	94.2	125.7	62.8	94.2	47.1	**7.96**	19	81	4.263	28	56	2.000	30	56	1.867
381.6	190.8	190.8	95.4	127.2	63.6	95.4	47.7	**7.86**	40	56	1.400	28	56	2.000	13	73	5.615
390.6	195.3	195.3	97.6	130.2	65.1	97.6	48.8	**7.68**	27	67	2.481	28	56	2.000	21	65	3.095
393.7	196.8	196.8	98.4	131.2	65.6	98.4	49.2	**7.62**	42	57	1.357	28	56	2.000	13	73	5.615
401.8	200.9	200.9	100.4	133.9	67.0	100.4	50.2	**7.47**	20	80	4.000	28	56	2.000	30	56	1.867
405.4	202.7	202.7	101.4	135.1	67.6	101.4	50.7	**7.40**	40	56	1.400	28	56	2.000	14	74	5.286
407.4	203.7	203.7	101.8	135.8	67.9	101.8	50.9	**7.36**	29	69	2.379	28	56	2.000	21	65	3.095
418.2	209.1	209.1	104.6	139.4	69.7	104.6	52.3	**7.17**	42	57	1.357	28	56	2.000	14	74	5.286
421.2	210.6	210.6	105.3	140.4	70.2	105.3	52.7	**7.12**	41	52	1.268	28	56	2.000	13	73	5.615
433.4	216.7	216.7	108.4	144.5	72.2	108.4	54.2	**6.92**	43	53	1.233	28	56	2.000	13	73	5.615
447.5	223.8	223.8	111.9	149.2	74.6	111.9	55.9	**6.70**	41	52	1.268	28	56	2.000	14	74	5.286
450.0	225.0	225.0	112.5	150.0	75.0	112.5	56.3	**6.67**	21	75	3.571	28	56	2.000	30	56	1.867
454.3	227.2	227.2	113.6	151.4	75.7	113.6	56.8	**6.60**	30	64	2.133	28	56	2.000	21	65	3.095
460.5	230.2	230.2	115.1	153.5	76.7	115.1	57.6	**6.51**	43	53	1.233	28	56	2.000	14	74	5.286
484.3	242.2	242.2	121.1	161.4	80.7	121.1	60.5	**6.19**	22	73	3.318	28	56	2.000	30	56	1.867
484.6	242.3	242.3	121.2	161.5	80.8	121.2	60.6	**6.19**	31	62	2.000	28	56	2.000	21	65	3.095
499.5	249.8	249.8	124.9	166.5	83.3	124.9	62.4	**6.01**	23	74	3.217	28	56	2.000	30	56	1.867
507.0	253.5	253.5	126.7	169.0	84.5	126.7	63.4	**5.92**	34	65	1.912	28	56	2.000	21	65	3.095
534.7	267.4	267.4	133.7	178.2	89.1	133.7	66.8	**5.61**	32	58	1.813	28	56	2.000	21	65	3.095
543.3	271.6	271.6	135.8	181.1	90.5	135.8	67.9	**5.52**	24	71	2.958	28	56	2.000	30	56	1.867
550.4	275.2	275.2	137.6	183.5	91.7	137.6	68.8	**5.45**	25	73	2.920	28	56	2.000	30	56	1.867
569.2	284.6	284.6	142.3	189.7	94.9	142.3	71.2	**5.27**	37	63	1.703	28	56	2.000	21	65	3.095
572.0	286.0	286.0	143.0	190.7	95.3	143.0	71.5	**5.24**	36	61	1.694	28	56	2.000	21	65	3.095
595.1	297.6	297.6	148.8	198.4	99.2	148.8	74.4	**5.04**	35	57	1.629	28	56	2.000	21	65	3.095
596.9	298.5	298.5	149.2	199.0	99.5	149.2	74.6	**5.03**	26	70	2.692	28	56	2.000	30	56	1.867
625.0	312.5	312.5	156.3	208.3	104.2	156.3	78.1	**4.80**	28	72	2.571	28	56	2.000	30	56	1.867
630.0	315.0	315.0	157.5	210.0	105.0	157.5	78.8	**4.76**	39	60	1.538	28	56	2.000	21	65	3.095
647.7	323.8	323.8	161.9	215.9	107.9	161.9	81.0	**4.63**	27	67	2.481	28	56	2.000	30	56	1.867
675.5	337.7	337.7	168.9	225.2	112.6	168.9	84.4	**4.44**	29	69	2.379	28	56	2.000	30	56	1.867
692.3	346.2	346.2	173.1	230.8	115.4	173.1	86.5	**4.33**	40	56	1.400	28	56	2.000	21	65	3.095
714.2	357.1	357.1	178.5	238.1	119.0	178.5	89.3	**4.20**	42	57	1.357	28	56	2.000	21	65	3.095
753.3	376.7	376.7	188.3	251.1	125.6	188.3	94.2	**3.98**	30	64	2.133	28	56	2.000	30	56	1.867
764.2	382.1	382.1	191.1	254.7	127.4	191.1	95.5	**3.93**	41	52	1.268	28	56	2.000	21	65	3.095
786.4	393.2	393.2	196.6	262.1	131.1	196.6	98.3	**3.82**	43	53	1.233	28	56	2.000	21	65	3.095
803.6	401.8	401.8	200.9	267.9	133.9	200.9	100.4	**3.73**	31	62	2.000	28	56	2.000	30	56	1.867
840.7	420.3	420.3	210.2	280.2	140.1	210.2	105.1	**3.57**	34	65	1.912	28	56	2.000	30	56	1.867
886.7	443.3	443.3	221.7	295.6	147.8	221.7	110.8	**3.38**	32	58	1.813	28	56	2.000	30	56	1.867
943.9	471.9	471.9	236.0	314.6	157.3	236.0	118.0	**3.18**	37	63	1.703	28	56	2.000	30	56	1.867
948.5	474.2	474.2	237.1	316.2	158.1	237.1	118.6	**3.16**	36	61	1.694	28	56	2.000	30	56	1.867
986.8	493.4	493.4	246.7	328.9	164.5	246.7	123.4	**3.04**	35	57	1.629	28	56	2.000	30	56	1.867
1044.6	522.3	522.3	261.2	348.2	174.1	261.2	130.6	**2.87**	39	60	1.538	28	56	2.000	30	56	1.867
1148.0	574.0	574.0	287.0	382.7	191.3	287.0	143.5	**2.61**	40	56	1.400	28	56	2.000	30	56	1.867
1184.2	592.1	592.1	296.1	394.7	197.4	296.1	148.0	**2.53**	42	57	1.357	28	56	2.000	30	56	1.867
1267.2	633.6	633.6	316.8	422.4	211.2	316.8	158.4	**2.37**	41	52	1.268	28	56	2.000	30	56	1.867
1303.9	652.0	652.0	326.0	434.6	217.3	326.0	163.0	**2.30**	43	53	1.233	28	56	2.000	30	56	1.867

ECR45

BOTH SHAFT SAME SPEED

OUTPUT SPEEDS (NOMINAL)								OUTPUT	FIRST PAIR			TRANSVERSE PAIR			THIRD PAIR		
3000		1500		1000		750		RATIO	PINION	WHEEL	RATIO:1	PINION	WHEEL	RATIO:1	PINION	WHEEL	RATIO:1
117.3	117.3	58.6	58.6	39.1	39.1	29.3	29.3	**25.58**	18	82	4.556	42	42	1.000	13	73	5.615
119.5	119.5	59.8	59.8	39.8	39.8	29.9	29.9	**25.10**	17	76	4.471	42	42	1.000	13	73	5.615
125.3	125.3	62.7	62.7	41.8	41.8	31.3	31.3	**23.94**	19	81	4.263	42	42	1.000	13	73	5.615
128.0	128.0	64.0	64.0	42.7	42.7	32.0	32.0	**23.43**	18	82	4.556	42	42	1.000	14	72	5.143
130.5	130.5	65.2	65.2	43.5	43.5	32.6	32.6	**22.99**	17	76	4.471	42	42	1.000	14	72	5.143
133.6	133.6	66.8	66.8	44.5	44.5	33.4	33.4	**22.46**	20	80	4.000	42	42	1.000	13	73	5.615
136.8	136.8	68.4	68.4	45.6	45.6	34.2	34.2	**21.92**	19	81	4.263	42	42	1.000	14	72	5.143
145.8	145.8	72.9	72.9	48.6	48.6	36.5	36.5	**20.57**	20	80	4.000	42	42	1.000	14	72	5.143
149.6	149.6	74.8	74.8	49.9	49.9	37.4	37.4	**20.05**	21	75	3.571	42	42	1.000	13	73	5.615
161.0	161.0	80.5	80.5	53.7	53.7	40.3	40.3	**18.63**	22	73	3.318	42	42	1.000	13	73	5.615
163.3	163.3	81.7	81.7	54.4	54.4	40.8	40.8	**18.37**	21	75	3.571	42	42	1.000	14	72	5.143
166.0	166.0	83.0	83.0	55.3	55.3	41.5	41.5	**18.07**	23	74	3.217	42	42	1.000	13	73	5.615
175.8	175.8	87.9	87.9	58.6	58.6	43.9	43.9	**17.06**	22	73	3.318	42	42	1.000	14	72	5.143
181.3	181.3	90.7	90.7	60.4	60.4	45.3	45.3	**16.55**	23	74	3.217	42	42	1.000	14	72	5.143
180.6	180.6	90.3	90.3	60.2	60.2	45.1	45.1	**16.61**	24	71	2.958	42	42	1.000	13	73	5.615
183.0	183.0	91.5	91.5	61.0	61.0	45.7	45.7	**16.40**	25	73	2.920	42	42	1.000	13	73	5.615
199.8	199.8	99.9	99.9	66.6	66.6	49.9	49.9	**15.02**	25	73	2.920	42	42	1.000	14	72	5.143
197.2	197.2	98.6	98.6	65.7	65.7	49.3	49.3	**15.21**	24	71	2.958	42	42	1.000	14	72	5.143
198.4	198.4	99.2	99.2	66.1	66.1	49.6	49.6	**15.12**	26	70	2.692	42	42	1.000	13	73	5.615
207.8	207.8	103.9	103.9	69.3	69.3	51.9	51.9	**14.44**	28	72	2.571	42	42	1.000	13	73	5.615
212.8	212.8	106.4	106.4	70.9	70.9	53.2	53.2	**14.10**	18	82	4.556	42	42	1.000	21	65	3.095
215.3	215.3	107.6	107.6	71.8	71.8	53.8	53.8	**13.93**	27	67	2.481	42	42	1.000	13	73	5.615
216.7	216.7	108.3	108.3	72.2	72.2	54.2	54.2	**13.85**	26	70	2.692	42	42	1.000	14	72	5.143
216.8	216.8	108.4	108.4	72.3	72.3	54.2	54.2	**13.84**	17	76	4.471	42	42	1.000	21	65	3.095
224.5	224.5	112.3	112.3	74.8	74.8	56.1	56.1	**13.36**	29	69	2.379	42	42	1.000	13	73	5.615
226.9	226.9	113.4	113.4	75.6	75.6	56.7	56.7	**13.22**	28	72	2.571	42	42	1.000	14	72	5.143
227.4	227.4	113.7	113.7	75.8	75.8	56.8	56.8	**13.20**	19	81	4.263	42	42	1.000	21	65	3.095
235.1	235.1	117.5	117.5	78.4	78.4	58.8	58.8	**12.76**	27	67	2.481	42	42	1.000	14	72	5.143
242.3	242.3	121.2	121.2	80.8	80.8	60.6	60.6	**12.38**	20	80	4.000	42	42	1.000	21	65	3.095
245.2	245.2	122.6	122.6	81.7	81.7	61.3	61.3	**12.24**	29	69	2.379	42	42	1.000	14	72	5.143
250.4	250.4	125.2	125.2	83.5	83.5	62.6	62.6	**11.98**	30	64	2.133	42	42	1.000	13	73	5.615
267.1	267.1	133.6	133.6	89.0	89.0	66.8	66.8	**11.23**	31	62	2.000	42	42	1.000	13	73	5.615
271.4	271.4	135.7	135.7	90.5	90.5	67.8	67.8	**11.05**	21	75	3.571	42	42	1.000	21	65	3.095
273.4	273.4	136.7	136.7	91.1	91.1	68.4	68.4	**10.97**	30	64	2.133	42	42	1.000	14	72	5.143
279.5	279.5	139.7	139.7	93.2	93.2	69.9	69.9	**10.74**	34	65	1.912	42	42	1.000	13	73	5.615
291.7	291.7	145.8	145.8	97.2	97.2	72.9	72.9	**10.29**	31	62	2.000	42	42	1.000	14	72	5.143
292.1	292.1	146.0	146.0	97.4	97.4	73.0	73.0	**10.27**	22	73	3.318	42	42	1.000	21	65	3.095
294.8	294.8	147.4	147.4	98.3	98.3	73.7	73.7	**10.18**	32	58	1.813	42	42	1.000	13	73	5.615
301.2	301.2	150.6	150.6	100.4	100.4	75.3	75.3	**9.96**	23	74	3.217	42	42	1.000	21	65	3.095
305.1	305.1	152.6	152.6	101.7	101.7	76.3	76.3	**9.83**	34	65	1.912	42	42	1.000	14	72	5.143
313.8	313.8	156.9	156.9	104.6	104.6	78.4	78.4	**9.56**	37	63	1.703	42	42	1.000	13	73	5.615
315.3	315.3	157.6	157.6	105.1	105.1	78.8	78.8	**9.51**	36	61	1.694	42	42	1.000	13	73	5.615
321.8	321.8	160.9	160.9	107.3	107.3	80.5	80.5	**9.32**	32	58	1.813	42	42	1.000	14	72	5.143
327.6	327.6	163.8	163.8	109.2	109.2	81.9	81.9	**9.16**	24	71	2.958	42	42	1.000	21	65	3.095
328.0	328.0	164.0	164.0	109.3	109.3	82.0	82.0	**9.15**	35	57	1.629	42	42	1.000	13	73	5.615
331.9	331.9	166.0	166.0	110.6	110.6	83.0	83.0	**9.04**	25	73	2.920	42	42	1.000	21	65	3.095
342.6	342.6	171.3	171.3	114.2	114.2	85.6	85.6	**8.76**	37	63	1.703	42	42	1.000	14	72	5.143
344.3	344.3	172.1	172.1	114.8	114.8	86.1	86.1	**8.71**	36	61	1.694	42	42	1.000	14	72	5.143
347.3	347.3	173.6	173.6	115.8	115.8	86.8	86.8	**8.64**	39	60	1.538	42	42	1.000	13	73	5.615
352.8	352.8	176.4	176.4	117.6	117.6	88.2	88.2	**8.50**	18	82	4.556	42	42	1.000	30	56	1.867
358.2	358.2	179.1	179.1	119.4	119.4	89.5	89.5	**8.38**	35	57	1.629	42	42	1.000	14	72	5.143
359.5	359.5	179.7	179.7	119.8	119.8	89.9	89.9	**8.35**	17	76	4.471	42	42	1.000	30	56	1.867
360.0	360.0	180.0	180.0	120.0	120.0	90.0	90.0	**8.33**	26	70	2.692	42	42	1.000	21	65	3.095
376.9	376.9	188.5	188.5	125.6	125.6	94.2	94.2	**7.96**	28	72	2.571	42	42	1.000	21	65	3.095
377.0	377.0	188.5	188.5	125.7	125.7	94.2	94.2	**7.96**	19	81	4.263	42	42	1.000	30	56	1.867
379.2	379.2	189.6	189.6	126.4	126.4	94.8	94.8	**7.91**	39	60	1.538	42	42	1.000	14	72	5.143
381.6	381.6	190.8	190.8	127.2	127.2	95.4	95.4	**7.86**	40	56	1.400	42	42	1.000	13	73	5.615
390.6	390.6	195.3	195.3	130.2	130.2	97.6	97.6	**7.68**	27	67	2.481	42	42	1.000	21	65	3.095
393.7	393.7	196.8	196.8	131.2	131.2	98.4	98.4	**7.62**	42	57	1.357	42	42	1.000	13	73	5.615
401.8	401.8	200.9	200.9	133.9	133.9	100.4	100.4	**7.47**	20	80	4.000	42	42	1.000	30	56	1.867
407.4	407.4	203.7	203.7	135.8	135.8	101.8	101.8	**7.36**	29	69	2.379	42	42	1.000	21	65	3.095
416.7	416.7	208.3	208.3	138.9	138.9	104.2	104.2	**7.20**	40	56	1.400	42	42	1.000	14	72	5.143
429.8	429.8	214.9	214.9	143.3	143.3	107.5	107.5	**6.98**	42	57	1.357	42	42	1.000	14	72	5.143
421.2	421.2	210.6	210.6	140.4	140.4	105.3	105.3	**7.12**	41	52	1.268	42	42	1.000	13	73	5.615
433.4	433.4	216.7	216.7	144.5	144.5	108.4	108.4	**6.92**	43	53	1.233	42	42	1.000	13	73	5.615
450.0	450.0	225.0	225.0	150.0	150.0	112.5	112.5	**6.67**	21	75	3.571	42	42	1.000	30	56	1.867
454.3	454.3	227.2	227.2	151.4	151.4	113.6	113.6	**6.60**	30	64	2.133	42	42	1.000	21	65	3.095
459.9	459.9	230.0	230.0	153.3	153.3	115.0	115.0	**6.52**	41	52	1.268	42	42	1.000	14	72	5.143
473.3	473.3	236.6	236.6	157.8	157.8	118.3	118.3	**6.34**	43	53	1.233	42	42	1.000	14	72	5.143
484.3	484.3	242.2	242.2	161.4	161.4	121.1	121.1	**6.19**	22	73	3.318	42	42	1.000	30	56	1.867
484.6	484.6	242.3	242.3	161.5	161.5	121.2	121.2	**6.19**	31	62	2.000	42	42	1.000	21	65	3.095

499.5	499.5	249.8	249.8	166.5	166.5	124.9	124.9	**6.01**	23	74	3.217	42	42	1.000	30	56	1.867
507.0	507.0	253.5	253.5	169.0	169.0	126.7	126.7	**5.92**	34	65	1.912	42	42	1.000	21	65	3.095
534.7	534.7	267.4	267.4	178.2	178.2	133.7	133.7	**5.61**	32	58	1.813	42	42	1.000	21	65	3.095
543.3	543.3	271.6	271.6	181.1	181.1	135.8	135.8	**5.52**	24	71	2.958	42	42	1.000	30	56	1.867
550.4	550.4	275.2	275.2	183.5	183.5	137.6	137.6	**5.45**	25	73	2.920	42	42	1.000	30	56	1.867
569.2	569.2	284.6	284.6	189.7	189.7	142.3	142.3	**5.27**	37	63	1.703	42	42	1.000	21	65	3.095
572.0	572.0	286.0	286.0	190.7	190.7	143.0	143.0	**5.24**	36	61	1.694	42	42	1.000	21	65	3.095
595.1	595.1	297.6	297.6	198.4	198.4	148.8	148.8	**5.04**	35	57	1.629	42	42	1.000	21	65	3.095
596.9	596.9	298.5	298.5	199.0	199.0	149.2	149.2	**5.03**	26	70	2.692	42	42	1.000	30	56	1.867
625.0	625.0	312.5	312.5	208.3	208.3	156.3	156.3	**4.80**	28	72	2.571	42	42	1.000	30	56	1.867
630.0	630.0	315.0	315.0	210.0	210.0	157.5	157.5	**4.76**	39	60	1.538	42	42	1.000	21	65	3.095
647.7	647.7	323.8	323.8	215.9	215.9	161.9	161.9	**4.63**	27	67	2.481	42	42	1.000	30	56	1.867
675.5	675.5	337.7	337.7	225.2	225.2	168.9	168.9	**4.44**	29	69	2.379	42	42	1.000	30	56	1.867
692.3	692.3	346.2	346.2	230.8	230.8	173.1	173.1	**4.33**	40	56	1.400	42	42	1.000	21	65	3.095
714.2	714.2	357.1	357.1	238.1	238.1	178.5	178.5	**4.20**	42	57	1.357	42	42	1.000	21	65	3.095
753.3	753.3	376.7	376.7	251.1	251.1	188.3	188.3	**3.98**	30	64	2.133	42	42	1.000	30	56	1.867
764.2	764.2	382.1	382.1	254.7	254.7	191.1	191.1	**3.93**	41	52	1.268	42	42	1.000	21	65	3.095
786.4	786.4	393.2	393.2	262.1	262.1	196.6	196.6	**3.82**	43	53	1.233	42	42	1.000	21	65	3.095
803.6	803.6	401.8	401.8	267.9	267.9	200.9	200.9	**3.73**	31	62	2.000	42	42	1.000	30	56	1.867
840.7	840.7	420.3	420.3	280.2	280.2	210.2	210.2	**3.57**	34	65	1.912	42	42	1.000	30	56	1.867
886.7	886.7	443.3	443.3	295.6	295.6	221.7	221.7	**3.38**	32	58	1.813	42	42	1.000	30	56	1.867
943.9	943.9	471.9	471.9	314.6	314.6	236.0	236.0	**3.18**	37	63	1.703	42	42	1.000	30	56	1.867
948.5	948.5	474.2	474.2	316.2	316.2	237.1	237.1	**3.16**	36	61	1.694	42	42	1.000	30	56	1.867
986.8	986.8	493.4	493.4	328.9	328.9	246.7	246.7	**3.04**	35	57	1.629	42	42	1.000	30	56	1.867
1044.6	1044.6	522.3	522.3	348.2	348.2	261.2	261.2	**2.87**	39	60	1.538	42	42	1.000	30	56	1.867
1148.0	1148.0	574.0	574.0	382.7	382.7	287.0	287.0	**2.61**	40	56	1.400	42	42	1.000	30	56	1.867
1184.2	1184.2	592.1	592.1	394.7	394.7	296.1	296.1	**2.53**	42	57	1.357	42	42	1.000	30	56	1.867
1267.2	1267.2	633.6	633.6	422.4	422.4	316.8	316.8	**2.37**	41	52	1.268	42	42	1.000	30	56	1.867
1303.9	1303.9	652.0	652.0	434.6	434.6	326.0	326.0	**2.30**	43	53	1.233	42	42	1.000	30	56	1.867

INNER SHAFT TWICE OUTER SHAFT SPEED

OUTPUT SPEEDS (NOMINAL)								**OUTPUT**	FIRST PAIR			TRANSVERSE PAIR			THIRD PAIR		
3000		1500		1000		750		**RATIO**	PINION	WHEEL	RATIO:1	PINION	WHEEL	RATIO:1	PINION	WHEEL	RATIO:1
117.3	58.6	58.6	29.3	39.1	19.5	29.3	14.7	**25.58**	18	82	4.556	28	56	2.000	13	73	5.615
119.5	59.8	59.8	29.9	39.8	19.9	29.9	14.9	**25.10**	17	76	4.471	28	56	2.000	13	73	5.615
125.3	62.7	62.7	31.3	41.8	20.9	31.3	15.7	**23.94**	19	81	4.263	28	56	2.000	13	73	5.615
128.0	64.0	64.0	32.0	42.7	21.3	32.0	16.0	**23.43**	18	82	4.556	28	56	2.000	14	72	5.143
130.5	65.2	65.2	32.6	43.5	21.7	32.6	16.3	**22.99**	17	76	4.471	28	56	2.000	14	72	5.143
133.6	66.8	66.8	33.4	44.5	22.3	33.4	16.7	**22.46**	20	80	4.000	28	56	2.000	13	73	5.615
136.8	68.4	68.4	34.2	45.6	22.8	34.2	17.1	**21.92**	19	81	4.263	28	56	2.000	14	72	5.143
145.8	72.9	72.9	36.5	48.6	24.3	36.5	18.2	**20.57**	20	80	4.000	28	56	2.000	14	72	5.143
149.6	74.8	74.8	37.4	49.9	24.9	37.4	18.7	**20.05**	21	75	3.571	28	56	2.000	13	73	5.615
161.0	80.5	80.5	40.3	53.7	26.8	40.3	20.1	**18.63**	22	73	3.318	28	56	2.000	13	73	5.615
163.3	81.7	81.7	40.8	54.4	27.2	40.8	20.4	**18.37**	21	75	3.571	28	56	2.000	14	72	5.143
166.0	83.0	83.0	41.5	55.3	27.7	41.5	20.8	**18.07**	23	74	3.217	28	56	2.000	13	73	5.615
175.8	87.9	87.9	43.9	58.6	29.3	43.9	22.0	**17.06**	22	73	3.318	28	56	2.000	14	72	5.143
181.3	90.7	90.7	45.3	60.4	30.2	45.3	22.7	**16.55**	23	74	3.217	28	56	2.000	14	72	5.143
180.6	90.3	90.3	45.1	60.2	30.1	45.1	22.6	**16.61**	24	71	2.958	28	56	2.000	13	73	5.615
183.0	91.5	91.5	45.7	61.0	30.5	45.7	22.9	**16.40**	25	73	2.920	28	56	2.000	13	73	5.615
199.8	99.9	99.9	49.9	66.6	33.3	49.9	25.0	**15.02**	25	73	2.920	28	56	2.000	14	72	5.143
197.2	98.6	98.6	49.3	65.7	32.9	49.3	24.6	**15.21**	24	71	2.958	28	56	2.000	14	72	5.143
198.4	99.2	99.2	49.6	66.1	33.1	49.6	24.8	**15.12**	26	70	2.692	28	56	2.000	13	73	5.615
207.8	103.9	103.9	51.9	69.3	34.6	51.9	26.0	**14.44**	28	72	2.571	28	56	2.000	13	73	5.615
212.8	106.4	106.4	53.2	70.9	35.5	53.2	26.6	**14.10**	18	82	4.556	28	56	2.000	21	65	3.095
215.3	107.6	107.6	53.8	71.8	35.9	53.8	26.9	**13.93**	27	67	2.481	28	56	2.000	13	73	5.615
216.7	108.3	108.3	54.2	72.2	36.1	54.2	27.1	**13.85**	26	70	2.692	28	56	2.000	14	72	5.143
216.8	108.4	108.4	54.2	72.3	36.1	54.2	27.1	**13.84**	17	76	4.471	28	56	2.000	21	65	3.095
224.5	112.3	112.3	56.1	74.8	37.4	56.1	28.1	**13.36**	29	69	2.379	28	56	2.000	13	73	5.615
226.9	113.4	113.4	56.7	75.6	37.8	56.7	28.4	**13.22**	28	72	2.571	28	56	2.000	14	72	5.143
227.4	113.7	113.7	56.8	75.8	37.9	56.8	28.4	**13.20**	19	81	4.263	28	56	2.000	21	65	3.095
235.1	117.5	117.5	58.8	78.4	39.2	58.8	29.4	**12.76**	27	67	2.481	28	56	2.000	14	72	5.143
242.3	121.2	121.2	60.6	80.8	40.4	60.6	30.3	**12.38**	20	80	4.000	28	56	2.000	21	65	3.095
245.2	122.6	122.6	61.3	81.7	40.9	61.3	30.6	**12.24**	29	69	2.379	28	56	2.000	14	72	5.143
250.4	125.2	125.2	62.6	83.5	41.7	62.6	31.3	**11.98**	30	64	2.133	28	56	2.000	13	73	5.615
267.1	133.6	133.6	66.8	89.0	44.5	66.8	33.4	**11.23**	31	62	2.000	28	56	2.000	13	73	5.615
271.4	135.7	135.7	67.8	90.5	45.2	67.8	33.9	**11.05**	21	75	3.571	28	56	2.000	21	65	3.095
273.4	136.7	136.7	68.4	91.1	45.6	68.4	34.2	**10.97**	30	64	2.133	28	56	2.000	14	72	5.143
279.5	139.7	139.7	69.9	93.2	46.6	69.9	34.9	**10.74**	34	65	1.912	28	56	2.000	13	73	5.615
291.7	145.8	145.8	72.9	97.2	48.6	72.9	36.5	**10.29**	31	62	2.000	28	56	2.000	14	72	5.143
292.1	146.0	146.0	73.0	97.4	48.7	73.0	36.5	**10.27**	22	73	3.318	28	56	2.000	21	65	3.095
294.8	147.4	147.4	73.7	98.3	49.1	73.7	36.8	**10.18**	32	58	1.813	28	56	2.000	13	73	5.615
301.2	150.6	150.6	75.3	100.4	50.2	75.3	37.7	**9.96**	23	74	3.217	28	56	2.000	21	65	3.095
305.1	152.6	152.6	76.3	101.7	50.9	76.3	38.1	**9.83**	34	65	1.912	28	56	2.000	14	72	5.143
313.8	156.9	156.9	78.4	104.6	52.3	78.4	39.2	**9.56**	37	63	1.703	28	56	2.000	13	73	5.615
315.3	157.6	157.6	78.8	105.1	52.5	78.8	39.4	**9.51**	36	61	1.694	28	56	2.000	13	73	5.615
321.8	160.9	160.9	80.5	107.3	53.6	80.5	40.2	**9.32**	32	58	1.813	28	56	2.000	14	72	5.143
327.6	163.8	163.8	81.9	109.2	54.6	81.9	41.0	**9.16**	24	71	2.958	28	56	2.000	21	65	3.095
328.0	164.0	164.0	82.0	109.3	54.7	82.0	41.0	**9.15**	35	57	1.629	28	56	2.000	13	73	5.615
331.9	166.0	166.0	83.0	110.6	55.3	83.0	41.5	**9.04**	25	73	2.920	28	56	2.000	21	65	3.095

342.6	171.3	171.3	85.6	114.2	57.1	85.6	42.8	**8.76**	37	63	1.703	28	56	2.000	14	72	5.143
344.3	172.1	172.1	86.1	114.8	57.4	86.1	43.0	**8.71**	36	61	1.694	28	56	2.000	14	72	5.143
347.3	173.6	173.6	86.8	115.8	57.9	86.8	43.4	**8.64**	39	60	1.538	28	56	2.000	13	73	5.615
352.8	176.4	176.4	88.2	117.6	58.8	88.2	44.1	**8.50**	18	82	4.556	28	56	2.000	30	56	1.867
358.2	179.1	179.1	89.5	119.4	59.7	89.5	44.8	**8.38**	35	57	1.629	28	56	2.000	14	72	5.143
359.5	179.7	179.7	89.9	119.8	59.9	89.9	44.9	**8.35**	17	76	4.471	28	56	2.000	30	56	1.867
360.0	180.0	180.0	90.0	120.0	60.0	90.0	45.0	**8.33**	26	70	2.692	28	56	2.000	21	65	3.095
376.9	188.5	188.5	94.2	125.6	62.8	94.2	47.1	**7.96**	28	72	2.571	28	56	2.000	21	65	3.095
377.0	188.5	188.5	94.2	125.7	62.8	94.2	47.1	**7.96**	19	81	4.263	28	56	2.000	30	56	1.867
379.2	189.6	189.6	94.8	126.4	63.2	94.8	47.4	**7.91**	39	60	1.538	28	56	2.000	14	72	5.143
381.6	190.8	190.8	95.4	127.2	63.6	95.4	47.7	**7.86**	40	56	1.400	28	56	2.000	13	73	5.615
390.6	195.3	195.3	97.6	130.2	65.1	97.6	48.8	**7.68**	27	67	2.481	28	56	2.000	21	65	3.095
393.7	196.8	196.8	98.4	131.2	65.6	98.4	49.2	**7.62**	42	57	1.357	28	56	2.000	13	73	5.615
401.8	200.9	200.9	100.4	133.9	67.0	100.4	50.2	**7.47**	20	80	4.000	28	56	2.000	30	56	1.867
407.4	203.7	203.7	101.8	135.8	67.9	101.8	50.9	**7.36**	29	69	2.379	28	56	2.000	21	65	3.095
416.7	208.3	208.3	104.2	138.9	69.4	104.2	52.1	**7.20**	40	56	1.400	28	56	2.000	14	72	5.143
429.8	214.9	214.9	107.5	143.3	71.6	107.5	53.7	**6.98**	42	57	1.357	28	56	2.000	14	72	5.143
421.2	210.6	210.6	105.3	140.4	70.2	105.3	52.7	**7.12**	41	52	1.268	28	56	2.000	13	73	5.615
433.4	216.7	216.7	108.4	144.5	72.2	108.4	54.2	**6.92**	43	53	1.233	28	56	2.000	13	73	5.615
450.0	225.0	225.0	112.5	150.0	75.0	112.5	56.3	**6.67**	21	75	3.571	28	56	2.000	30	56	1.867
454.3	227.2	227.2	113.6	151.4	75.7	113.6	56.8	**6.60**	30	64	2.133	28	56	2.000	21	65	3.095
459.9	230.0	230.0	115.0	153.3	76.7	115.0	57.5	**6.52**	41	52	1.268	28	56	2.000	14	72	5.143
473.3	236.6	236.6	118.3	157.8	78.9	118.3	59.2	**6.34**	43	53	1.233	28	56	2.000	14	72	5.143
484.3	242.2	242.2	121.1	161.4	80.7	121.1	60.5	**6.19**	22	73	3.318	28	56	2.000	30	56	1.867
484.6	242.3	242.3	121.2	161.5	80.8	121.2	60.6	**6.19**	31	62	2.000	28	56	2.000	21	65	3.095
499.5	249.8	249.8	124.9	166.5	83.3	124.9	62.4	**6.01**	23	74	3.217	28	56	2.000	30	56	1.867
507.0	253.5	253.5	126.7	169.0	84.5	126.7	63.4	**5.92**	34	65	1.912	28	56	2.000	21	65	3.095
534.7	267.4	267.4	133.7	178.2	89.1	133.7	66.8	**5.61**	32	58	1.813	28	56	2.000	21	65	3.095
543.3	271.6	271.6	135.8	181.1	90.5	135.8	67.9	**5.52**	24	71	2.958	28	56	2.000	30	56	1.867
550.4	275.2	275.2	137.6	183.5	91.7	137.6	68.8	**5.45**	25	73	2.920	28	56	2.000	30	56	1.867
569.2	284.6	284.6	142.3	189.7	94.9	142.3	71.2	**5.27**	37	63	1.703	28	56	2.000	21	65	3.095
572.0	286.0	286.0	143.0	190.7	95.3	143.0	71.5	**5.24**	36	61	1.694	28	56	2.000	21	65	3.095
595.1	297.6	297.6	148.8	198.4	99.2	148.8	74.4	**5.04**	35	57	1.629	28	56	2.000	21	65	3.095
596.9	298.5	298.5	149.2	199.0	99.5	149.2	74.6	**5.03**	26	70	2.692	28	56	2.000	30	56	1.867
625.0	312.5	312.5	156.3	208.3	104.2	156.3	78.1	**4.80**	28	72	2.571	28	56	2.000	30	56	1.867
630.0	315.0	315.0	157.5	210.0	105.0	157.5	78.8	**4.76**	39	60	1.538	28	56	2.000	21	65	3.095
647.7	323.8	323.8	161.9	215.9	107.9	161.9	81.0	**4.63**	27	67	2.481	28	56	2.000	30	56	1.867
675.5	337.7	337.7	168.9	225.2	112.6	168.9	84.4	**4.44**	29	69	2.379	28	56	2.000	30	56	1.867
692.3	346.2	346.2	173.1	230.8	115.4	173.1	86.5	**4.33**	40	56	1.400	28	56	2.000	21	65	3.095
714.2	357.1	357.1	178.5	238.1	119.0	178.5	89.3	**4.20**	42	57	1.357	28	56	2.000	21	65	3.095
753.3	376.7	376.7	188.3	251.1	125.6	188.3	94.2	**3.98**	30	64	2.133	28	56	2.000	30	56	1.867
764.2	382.1	382.1	191.1	254.7	127.4	191.1	95.5	**3.93**	41	52	1.268	28	56	2.000	21	65	3.095
786.4	393.2	393.2	196.6	262.1	131.1	196.6	98.3	**3.82**	43	53	1.233	28	56	2.000	21	65	3.095
803.6	401.8	401.8	200.9	267.9	133.9	200.9	100.4	**3.73**	31	62	2.000	28	56	2.000	30	56	1.867
840.7	420.3	420.3	210.2	280.2	140.1	210.2	105.1	**3.57**	34	65	1.912	28	56	2.000	30	56	1.867
886.7	443.3	443.3	221.7	295.6	147.8	221.7	110.8	**3.38**	32	58	1.813	28	56	2.000	30	56	1.867
943.9	471.9	471.9	236.0	314.6	157.3	236.0	118.0	**3.18**	37	63	1.703	28	56	2.000	30	56	1.867
948.5	474.2	474.2	237.1	316.2	158.1	237.1	118.6	**3.16**	36	61	1.694	28	56	2.000	30	56	1.867
986.8	493.4	493.4	246.7	328.9	164.5	246.7	123.4	**3.04**	35	57	1.629	28	56	2.000	30	56	1.867
1044.6	522.3	522.3	261.2	348.2	174.1	261.2	130.6	**2.87**	39	60	1.538	28	56	2.000	30	56	1.867
1148.0	574.0	574.0	287.0	382.7	191.3	287.0	143.5	**2.61**	40	56	1.400	28	56	2.000	30	56	1.867
1184.2	592.1	592.1	296.1	394.7	197.4	296.1	148.0	**2.53**	42	57	1.357	28	56	2.000	30	56	1.867
1267.2	633.6	633.6	316.8	422.4	211.2	316.8	158.4	**2.37**	41	52	1.268	28	56	2.000	30	56	1.867
1303.9	652.0	652.0	326.0	434.6	217.3	326.0	163.0	**2.30**	43	53	1.233	28	56	2.000	30	56	1.867

8. SERVICE FACTORS

The service factor required for an application is derived by multiplying together the following factors: -

a) Running and load factor C_H
b) Power source factor C_M
c) Starting factor C_A

SF (Service Factor) = $C_H \times C_M \times C_A$

RUNNING AND LOAD FACTOR C_H

TYPE OF LOAD	WORKING HOURS PER DAY AT FULL LOAD				
	UP TO 3 HOURS	3 TO 8 HOURS	8 TO 12 HOURS	12 TO 16 HOURS	16 TO 24 HOURS
UNIFORM	0.85	1	1.1	1.2	1.3
MODERATE	1.25	1.4	1.5	1.65	1.8
HEAVY	1.75	2	2.15	2.3	2.5

For guide to load types see page 5

POWER SOURCE FACTOR C_M

ELECTRIC/HYDRAULIC/AIR MOTOR	1
EDDY CURRENT/DISCO VS. DRIVE	1
ELECTRO MECHANICAL CLUTCH BRAKE	1.2
PNEUMATIC CLUTCH BRAKE	1.5
3 OR MORE CYLINDER INTERNAL COMBUSTION ENGINE	1.25
SINGLE AND TWIN CYLINDER INTERNAL COMBUSTION ENGINE	1.5

STARTING FACTOR C_A

NUMBER OF STARTS PER HOUR		
UP TO 120	120-300	300-1200
1	1.15	1.25

ATEX CERTIFICATION CAN ONLY BE APPLIED TO INLINE GEARBOXES ONLY.
FOR ATEX CERTIFICATION A SERVICE FACTOR OF 1.3 OR HIGHER IS REQUIRED FOR IT TO BE SUITABLE.

IF ATEX IS REQUIRED PLEASE STATE AT TIME OF QUOTE AND CONFIRM WHEN ORDERING. ATEX CERTIFICATES ARE SENT WITH THE UNITS.

	kW	0.06	0.09	0.12	0.18	0.25	0.37	0.55	0.75	1.10	1.50	2.20	3.00	4.00	5.50	7.50	11.00	15.00	18.50	22.00	30.00	37.00	45.00	55.00	75.00	90.00	110.00	132.00	160.00	200.00	250.00	315.00
RATIO	NM	0.43	0.65	0.85	1.20	1.70	2.50	3.80	5.00	7.30	9.90	14.00	20.00	26.00	36.00	49.00	71.00	97.00	120.00	142.00	194.00	238.00	289.00	354.00	482.00	579.00	707.00	849.00	1029.00	1286.00	1602.00	2019.00
116.61	13.55	0.27	0.18	0.14	0.10	0.07	0.05	0.03	0.02	0.02	0.01	0.01	0.01	0.00	0.00	0.00	0.00	0.00	0.00	0.00	0.00	0.00	0.00	0.00	0.00	0.00	0.00	0.00	0.00	0.00	0.00	0.00
101.70	13.55	0.31	0.21	0.16	0.11	0.08	0.05	0.04	0.03	0.02	0.01	0.01	0.01	0.01	0.00	0.00	0.00	0.00	0.00	0.00	0.00	0.00	0.00	0.00	0.00	0.00	0.00	0.00	0.00	0.00	0.00	0.00
89.62	12.52	0.32	0.21	0.16	0.12	0.08	0.06	0.04	0.03	0.02	0.01	0.01	0.01	0.01	0.00	0.00	0.00	0.00	0.00	0.00	0.00	0.00	0.00	0.00	0.00	0.00	0.00	0.00	0.00	0.00	0.00	0.00
79.65	12.04	0.35	0.23	0.18	0.13	0.09	0.06	0.04	0.03	0.02	0.02	0.01	0.01	0.01	0.00	0.00	0.00	0.00	0.00	0.00	0.00	0.00	0.00	0.00	0.00	0.00	0.00	0.00	0.00	0.00	0.00	0.00
71.27	11.64	0.38	0.25	0.19	0.14	0.10	0.07	0.04	0.03	0.02	0.02	0.01	0.01	0.01	0.00	0.00	0.00	0.00	0.00	0.00	0.00	0.00	0.00	0.00	0.00	0.00	0.00	0.00	0.00	0.00	0.00	0.00
64.13	11.09	0.40	0.27	0.20	0.14	0.10	0.07	0.05	0.03	0.02	0.02	0.01	0.01	0.01	0.00	0.00	0.00	0.00	0.00	0.00	0.00	0.00	0.00	0.00	0.00	0.00	0.00	0.00	0.00	0.00	0.00	0.00
57.98	10.41	0.42	0.28	0.21	0.15	0.11	0.07	0.05	0.04	0.02	0.02	0.01	0.01	0.01	0.00	0.00	0.00	0.00	0.00	0.00	0.00	0.00	0.00	0.00	0.00	0.00	0.00	0.00	0.00	0.00	0.00	0.00
52.62	10.05	0.44	0.29	0.22	0.16	0.11	0.08	0.05	0.04	0.03	0.02	0.01	0.01	0.01	0.01	0.00	0.00	0.00	0.00	0.00	0.00	0.00	0.00	0.00	0.00	0.00	0.00	0.00	0.00	0.00	0.00	0.00
47.91	9.67	0.47	0.31	0.24	0.17	0.12	0.08	0.05	0.04	0.03	0.02	0.01	0.01	0.01	0.01	0.00	0.00	0.00	0.00	0.00	0.00	0.00	0.00	0.00	0.00	0.00	0.00	0.00	0.00	0.00	0.00	0.00
43.74	9.31	0.50	0.33	0.25	0.18	0.13	0.09	0.06	0.04	0.03	0.02	0.02	0.01	0.01	0.01	0.00	0.00	0.00	0.00	0.00	0.00	0.00	0.00	0.00	0.00	0.00	0.00	0.00	0.00	0.00	0.00	0.00
40.01	8.96	0.52	0.34	0.26	0.19	0.13	0.09	0.06	0.04	0.03	0.02	0.02	0.01	0.01	0.01	0.00	0.00	0.00	0.00	0.00	0.00	0.00	0.00	0.00	0.00	0.00	0.00	0.00	0.00	0.00	0.00	0.00
34.08	8.39	0.57	0.38	0.29	0.21	0.14	0.10	0.06	0.05	0.03	0.02	0.02	0.01	0.01	0.01	0.01	0.00	0.00	0.00	0.00	0.00	0.00	0.00	0.00	0.00	0.00	0.00	0.00	0.00	0.00	0.00	0.00
30.93	8.13	0.61	0.40	0.31	0.22	0.15	0.11	0.07	0.05	0.04	0.03	0.02	0.01	0.01	0.01	0.01	0.00	0.00	0.00	0.00	0.00	0.00	0.00	0.00	0.00	0.00	0.00	0.00	0.00	0.00	0.00	0.00
28.16	7.86	0.65	0.43	0.33	0.23	0.16	0.11	0.07	0.06	0.04	0.03	0.02	0.01	0.01	0.01	0.01	0.00	0.00	0.00	0.00	0.00	0.00	0.00	0.00	0.00	0.00	0.00	0.00	0.00	0.00	0.00	0.00
25.71	7.60	0.69	0.45	0.35	0.25	0.17	0.12	0.08	0.06	0.04	0.03	0.02	0.01	0.01	0.01	0.01	0.00	0.00	0.00	0.00	0.00	0.00	0.00	0.00	0.00	0.00	0.00	0.00	0.00	0.00	0.00	0.00
21.88	7.22	0.77	0.51	0.39	0.27	0.19	0.13	0.09	0.07	0.05	0.03	0.02	0.02	0.01	0.01	0.01	0.00	0.00	0.00	0.00	0.00	0.00	0.00	0.00	0.00	0.00	0.00	0.00	0.00	0.00	0.00	0.00
19.29	6.96	0.84	0.56	0.42	0.30	0.21	0.14	0.09	0.07	0.05	0.04	0.03	0.02	0.01	0.01	0.01	0.01	0.00	0.00	0.00	0.00	0.00	0.00	0.00	0.00	0.00	0.00	0.00	0.00	0.00	0.00	0.00
17.14	6.66	0.90	0.60	0.46	0.32	0.23	0.16	0.10	0.08	0.05	0.04	0.03	0.02	0.01	0.01	0.01	0.01	0.00	0.00	0.00	0.00	0.00	0.00	0.00	0.00	0.00	0.00	0.00	0.00	0.00	0.00	0.00
15.34	6.39	0.97	0.64	0.49	0.35	0.25	0.17	0.11	0.08	0.06	0.04	0.03	0.02	0.02	0.01	0.01	0.01	0.00	0.00	0.00	0.00	0.00	0.00	0.00	0.00	0.00	0.00	0.00	0.00	0.00	0.00	0.00
13.80	6.13	1.03	0.68	0.52	0.37	0.26	0.18	0.12	0.09	0.06	0.04	0.03	0.02	0.02	0.01	0.01	0.01	0.00	0.00	0.00	0.00	0.00	0.00	0.00	0.00	0.00	0.00	0.00	0.00	0.00	0.00	0.00
12.48	5.92	1.10	0.73	0.56	0.40	0.28	0.19	0.12	0.09	0.07	0.05	0.03	0.02	0.02	0.01	0.01	0.01	0.00	0.00	0.00	0.00	0.00	0.00	0.00	0.00	0.00	0.00	0.00	0.00	0.00	0.00	0.00
11.32	5.68	1.17	0.77	0.59	0.42	0.29	0.20	0.13	0.10	0.07	0.05	0.04	0.03	0.02	0.01	0.01	0.01	0.01	0.00	0.00	0.00	0.00	0.00	0.00	0.00	0.00	0.00	0.00	0.00	0.00	0.00	0.00
10.31	5.44	1.23	0.81	0.62	0.44	0.31	0.21	0.14	0.11	0.07	0.05	0.04	0.03	0.02	0.01	0.01	0.01	0.01	0.00	0.00	0.00	0.00	0.00	0.00	0.00	0.00	0.00	0.00	0.00	0.00	0.00	0.00
9.41	5.22	1.29	0.85	0.65	0.46	0.33	0.22	0.15	0.11	0.08	0.06	0.04	0.03	0.02	0.02	0.01	0.01	0.01	0.00	0.00	0.00	0.00	0.00	0.00	0.00	0.00	0.00	0.00	0.00	0.00	0.00	0.00
8.61	4.98	1.35	0.89	0.68	0.48	0.34	0.23	0.15	0.12	0.08	0.06	0.04	0.03	0.02	0.02	0.01	0.01	0.01	0.00	0.00	0.00	0.00	0.00	0.00	0.00	0.00	0.00	0.00	0.00	0.00	0.00	0.00
8.11	4.82	1.38	0.91	0.70	0.50	0.35	0.24	0.16	0.12	0.08	0.06	0.04	0.03	0.02	0.02	0.01	0.01	0.01	0.00	0.00	0.00	0.00	0.00	0.00	0.00	0.00	0.00	0.00	0.00	0.00	0.00	0.00
7.33	4.59	1.46	0.96	0.74	0.52	0.37	0.25	0.16	0.13	0.09	0.06	0.04	0.03	0.02	0.02	0.01	0.01	0.01	0.01	0.00	0.00	0.00	0.00	0.00	0.00	0.00	0.00	0.00	0.00	0.00	0.00	0.00
6.65	4.38	1.53	1.01	0.77	0.55	0.39	0.26	0.17	0.13	0.09	0.07	0.05	0.03	0.03	0.02	0.01	0.01	0.01	0.01	0.00	0.00	0.00	0.00	0.00	0.00	0.00	0.00	0.00	0.00	0.00	0.00	0.00
6.06	4.17	1.60	1.06	0.81	0.57	0.40	0.27	0.18	0.14	0.09	0.07	0.05	0.03	0.03	0.02	0.01	0.01	0.01	0.01	0.00	0.00	0.00	0.00	0.00	0.00	0.00	0.00	0.00	0.00	0.00	0.00	0.00
5.53	4.00	1.68	1.11	0.85	0.60	0.43	0.29	0.19	0.14	0.10	0.07	0.05	0.04	0.03	0.02	0.01	0.01	0.01	0.01	0.01	0.00	0.00	0.00	0.00	0.00	0.00	0.00	0.00	0.00	0.00	0.00	0.00
5.06	3.79	1.74	1.15	0.88	0.62	0.44	0.30	0.20	0.15	0.10	0.08	0.05	0.04	0.03	0.02	0.02	0.01	0.01	0.01	0.01	0.00	0.00	0.00	0.00	0.00	0.00	0.00	0.00	0.00	0.00	0.00	0.00
4.64	3.63	1.82	1.20	0.92	0.65	0.46	0.31	0.21	0.16	0.11	0.08	0.06	0.04	0.03	0.02	0.02	0.01	0.01	0.01	0.01	0.00	0.00	0.00	0.00	0.00	0.00	0.00	0.00	0.00	0.00	0.00	0.00
4.15	3.37	1.89	1.25	0.95	0.68	0.48	0.32	0.21	0.16	0.11	0.08	0.06	0.04	0.03	0.02	0.02	0.01	0.01	0.01	0.01	0.00	0.00	0.00	0.00	0.00	0.00	0.00	0.00	0.00	0.00	0.00	0.00
3.74	3.14	1.96	1.29	0.99	0.70	0.49	0.34	0.22	0.17	0.12	0.08	0.06	0.04	0.03	0.02	0.02	0.01	0.01	0.01	0.01	0.00	0.00	0.00	0.00	0.00	0.00	0.00	0.00	0.00	0.00	0.00	0.00
3.38	2.91	2.00	1.32	1.01	0.72	0.51	0.34	0.23	0.17	0.12	0.09	0.06	0.04	0.03	0.02	0.02	0.01	0.01	0.01	0.01	0.00	0.00	0.00	0.00	0.00	0.00	0.00	0.00	0.00	0.00	0.00	0.00
3.06	2.70	2.05	1.35	1.03	0.73	0.52	0.35	0.23	0.18	0.12	0.09	0.06	0.04	0.03	0.02	0.02	0.01	0.01	0.01	0.01	0.00	0.00	0.00	0.00	0.00	0.00	0.00	0.00	0.00	0.00	0.00	0.00
2.79	2.46	2.05	1.36	1.04	0.74	0.52	0.35	0.23	0.18	0.12	0.09	0.06	0.04	0.03	0.02	0.02	0.01	0.01	0.01	0.01	0.00	0.00	0.00	0.00	0.00	0.00	0.00	0.00	0.00	0.00	0.00	0.00
2.55	2.28	2.08	1.38	1.05	0.75	0.53	0.36	0.24	0.18	0.12	0.09	0.06	0.04	0.03	0.02	0.02	0.01	0.01	0.01	0.01	0.00	0.00	0.00	0.00	0.00	0.00	0.00	0.00	0.00	0.00	0.00	0.00
2.33	2.09	2.08	1.38	1.05	0.75	0.53	0.36	0.24	0.18	0.12	0.09	0.06	0.04	0.03	0.02	0.02	0.01	0.01	0.01	0.01	0.00	0.00	0.00	0.00	0.00	0.00	0.00	0.00	0.00	0.00	0.00	0.00

DISCO DRIVES (KING'S LYNN) LIMITED, OLDMEDOW ROAD, HARDWICK INDUSTRIAL ESTATE, KING'S LYNN, NORFOLK. PE30 4LE.
TEL: +44(0)1553 761331, FAX: +44(0)1553 692137, WEB: www.discodrives.co.uk, EMAIL: sales@discodrives.co.uk

	kW	0.06	0.09	0.12	0.18	0.25	0.37	0.55	0.75	1.10	1.50	2.20	3.00	4.00	5.50	7.50	11.00	15.00	18.50	22.00	30.00	37.00	45.00	55.00	75.00	90.00	110.00	132.00	160.00	200.00	250.00	315.00
RATIO	NM	0.43	0.65	0.85	1.20	1.70	2.50	3.80	5.00	7.30	9.90	14.00	20.00	26.00	36.00	49.00	71.00	97.00	120.00	142.00	194.00	238.00	289.00	354.00	482.00	579.00	707.00	849.00	1029.00	1286.00	1602.00	2019.00
117.63	73.73	1.46	0.96	0.74	0.52	0.37	0.25	0.16	0.13	0.09	0.06	0.04	0.03	0.02	0.02	0.01	0.01	0.01	0.01	0.00	0.00	0.00	0.00	0.00	0.00	0.00	0.00	0.00	0.00	0.00	0.00	0.00
102.58	73.73	1.67	1.11	0.85	0.60	0.42	0.29	0.19	0.14	0.10	0.07	0.05	0.04	0.03	0.02	0.01	0.01	0.01	0.01	0.01	0.00	0.00	0.00	0.00	0.00	0.00	0.00	0.00	0.00	0.00	0.00	0.00
90.40	72.42	1.86	1.23	0.94	0.67	0.47	0.32	0.21	0.16	0.11	0.08	0.06	0.04	0.03	0.02	0.02	0.01	0.01	0.01	0.01	0.00	0.00	0.00	0.00	0.00	0.00	0.00	0.00	0.00	0.00	0.00	0.00
80.34	70.98	2.05	1.36	1.04	0.74	0.52	0.35	0.23	0.18	0.12	0.09	0.06	0.04	0.03	0.02	0.02	0.01	0.01	0.01	0.01	0.00	0.00	0.00	0.00	0.00	0.00	0.00	0.00	0.00	0.00	0.00	0.00
71.89	69.74	2.26	1.49	1.14	0.81	0.57	0.39	0.26	0.19	0.13	0.10	0.07	0.05	0.04	0.03	0.02	0.01	0.01	0.01	0.01	0.01	0.00	0.00	0.00	0.00	0.00	0.00	0.00	0.00	0.00	0.00	0.00
64.69	68.17	2.45	1.62	1.24	0.88	0.62	0.42	0.28	0.21	0.14	0.11	0.08	0.05	0.04	0.03	0.02	0.01	0.01	0.01	0.01	0.01	0.00	0.00	0.00	0.00	0.00	0.00	0.00	0.00	0.00	0.00	0.00
58.48	66.79	2.66	1.76	1.34	0.95	0.67	0.46	0.30	0.23	0.16	0.12	0.08	0.06	0.04	0.03	0.02	0.02	0.01	0.01	0.01	0.01	0.00	0.00	0.00	0.00	0.00	0.00	0.00	0.00	0.00	0.00	0.00
53.07	66.11	2.90	1.92	1.47	1.04	0.73	0.50	0.33	0.25	0.17	0.13	0.09	0.06	0.05	0.03	0.03	0.02	0.01	0.01	0.01	0.01	0.01	0.00	0.00	0.00	0.00	0.00	0.00	0.00	0.00	0.00	0.00
48.32	64.18	3.09	2.04	1.56	1.11	0.78	0.53	0.35	0.27	0.18	0.13	0.09	0.07	0.05	0.04	0.03	0.02	0.01	0.01	0.01	0.01	0.01	0.00	0.00	0.00	0.00	0.00	0.00	0.00	0.00	0.00	0.00
44.12	63.15	3.33	2.20	1.68	1.19	0.84	0.57	0.38	0.29	0.20	0.14	0.10	0.07	0.06	0.04	0.03	0.02	0.01	0.01	0.01	0.01	0.01	0.00	0.00	0.00	0.00	0.00	0.00	0.00	0.00	0.00	0.00
40.36	61.64	3.55	2.35	1.80	1.27	0.90	0.61	0.40	0.31	0.21	0.15	0.11	0.08	0.06	0.04	0.03	0.02	0.02	0.01	0.01	0.01	0.01	0.01	0.00	0.00	0.00	0.00	0.00	0.00	0.00	0.00	0.00
34.37	60.61	4.10	2.71	2.07	1.47	1.04	0.71	0.46	0.35	0.24	0.18	0.13	0.09	0.07	0.05	0.04	0.02	0.02	0.01	0.01	0.01	0.01	0.01	0.00	0.00	0.00	0.00	0.00	0.00	0.00	0.00	0.00
31.20	59.86	4.46	2.95	2.26	1.60	1.13	0.77	0.50	0.38	0.26	0.19	0.14	0.10	0.07	0.05	0.04	0.03	0.02	0.02	0.01	0.01	0.01	0.01	0.01	0.00	0.00	0.00	0.00	0.00	0.00	0.00	0.00
28.40	59.72	4.89	3.23	2.47	1.75	1.24	0.84	0.55	0.42	0.29	0.21	0.15	0.11	0.08	0.06	0.04	0.03	0.02	0.02	0.01	0.01	0.01	0.01	0.01	0.00	0.00	0.00	0.00	0.00	0.00	0.00	0.00
25.09	56.98	5.28	3.49	2.67	1.89	1.34	0.91	0.60	0.45	0.31	0.23	0.16	0.11	0.09	0.06	0.05	0.03	0.02	0.02	0.02	0.01	0.01	0.01	0.01	0.00	0.00	0.00	0.00	0.00	0.00	0.00	0.00
21.88	55.60	5.91	3.91	2.99	2.12	1.49	1.02	0.67	0.51	0.35	0.26	0.18	0.13	0.10	0.07	0.05	0.04	0.03	0.02	0.02	0.01	0.01	0.01	0.01	0.01	0.00	0.00	0.00	0.00	0.00	0.00	0.00
19.29	53.89	6.50	4.30	3.29	2.33	1.64	1.12	0.74	0.56	0.38	0.28	0.20	0.14	0.11	0.08	0.06	0.04	0.03	0.02	0.02	0.01	0.01	0.01	0.01	0.01	0.00	0.00	0.00	0.00	0.00	0.00	0.00
17.14	52.51	7.13	4.71	3.60	2.55	1.80	1.23	0.81	0.61	0.42	0.31	0.22	0.15	0.12	0.09	0.06	0.04	0.03	0.03	0.02	0.02	0.01	0.01	0.01	0.01	0.01	0.00	0.00	0.00	0.00	0.00	0.00
15.34	51.14	7.76	5.13	3.92	2.78	1.96	1.33	0.88	0.67	0.46	0.34	0.24	0.17	0.13	0.09	0.07	0.05	0.03	0.03	0.02	0.02	0.01	0.01	0.01	0.01	0.01	0.00	0.00	0.00	0.00	0.00	0.00
13.80	49.56	8.35	5.53	4.23	2.99	2.11	1.44	0.95	0.72	0.49	0.36	0.26	0.18	0.14	0.10	0.07	0.05	0.04	0.03	0.03	0.02	0.02	0.01	0.01	0.01	0.01	0.01	0.00	0.00	0.00	0.00	0.00
12.48	48.40	9.02	5.97	4.56	3.23	2.28	1.55	1.02	0.78	0.53	0.39	0.28	0.19	0.15	0.11	0.08	0.05	0.04	0.03	0.03	0.02	0.02	0.01	0.01	0.01	0.01	0.01	0.00	0.00	0.00	0.00	0.00
11.32	47.50	9.76	6.45	4.94	3.50	2.47	1.68	1.10	0.84	0.57	0.42	0.30	0.21	0.16	0.12	0.09	0.06	0.04	0.03	0.03	0.02	0.02	0.01	0.01	0.01	0.01	0.01	0.00	0.00	0.00	0.00	0.00
10.31	46.54	10.50	6.95	5.31	3.76	2.66	1.81	1.19	0.90	0.62	0.46	0.32	0.23	0.17	0.13	0.09	0.06	0.05	0.04	0.03	0.02	0.02	0.02	0.01	0.01	0.01	0.01	0.01	0.00	0.00	0.00	0.00
9.41	45.51	11.25	7.44	5.69	4.03	2.84	1.93	1.27	0.97	0.66	0.49	0.35	0.24	0.19	0.13	0.10	0.07	0.05	0.04	0.03	0.02	0.02	0.02	0.01	0.01	0.01	0.01	0.01	0.00	0.00	0.00	0.00
8.61	44.28	11.96	7.91	6.05	4.29	3.02	2.06	1.35	1.03	0.70	0.52	0.37	0.26	0.20	0.14	0.10	0.07	0.05	0.04	0.04	0.03	0.02	0.02	0.01	0.01	0.01	0.01	0.01	0.00	0.00	0.00	0.00
8.11	41.74	11.97	7.92	6.05	4.29	3.03	2.06	1.35	1.03	0.70	0.52	0.37	0.26	0.20	0.14	0.11	0.07	0.05	0.04	0.04	0.03	0.02	0.02	0.01	0.01	0.01	0.01	0.01	0.01	0.00	0.00	0.00
7.33	39.95	12.67	8.38	6.41	4.54	3.20	2.18	1.43	1.09	0.75	0.55	0.39	0.27	0.21	0.15	0.11	0.08	0.06	0.05	0.04	0.03	0.02	0.02	0.02	0.01	0.01	0.01	0.01	0.01	0.00	0.00	0.00
6.65	38.65	13.51	8.93	6.83	4.84	3.42	2.32	1.53	1.16	0.80	0.59	0.41	0.29	0.22	0.16	0.12	0.08	0.06	0.05	0.04	0.03	0.02	0.02	0.02	0.01	0.01	0.01	0.01	0.01	0.00	0.00	0.00
6.06	37.00	14.20	9.39	7.18	5.09	3.59	2.44	1.61	1.22	0.84	0.62	0.44	0.31	0.23	0.17	0.12	0.09	0.06	0.05	0.04	0.03	0.03	0.02	0.02	0.01	0.01	0.01	0.01	0.01	0.00	0.00	0.00
5.53	36.04	15.15	10.02	7.66	5.43	3.83	2.61	1.71	1.30	0.89	0.66	0.47	0.33	0.25	0.18	0.13	0.09	0.07	0.05	0.05	0.03	0.03	0.02	0.02	0.01	0.01	0.01	0.01	0.01	0.01	0.00	0.00
5.06	34.94	16.06	10.62	8.12	5.75	4.06	2.76	1.82	1.38	0.95	0.70	0.49	0.35	0.27	0.19	0.14	0.10	0.07	0.06	0.05	0.04	0.03	0.02	0.02	0.01	0.01	0.01	0.01	0.01	0.01	0.00	0.00
4.64	33.84	16.97	11.22	8.58	6.08	4.29	2.92	1.92	1.46	1.00	0.74	0.52	0.36	0.28	0.20	0.15	0.10	0.08	0.06	0.05	0.04	0.03	0.03	0.02	0.02	0.01	0.01	0.01	0.01	0.01	0.00	0.00
4.15	32.20	18.04	11.93	9.13	6.46	4.56	3.10	2.04	1.55	1.06	0.78	0.55	0.39	0.30	0.22	0.16	0.11	0.08	0.06	0.05	0.04	0.03	0.03	0.02	0.02	0.01	0.01	0.01	0.01	0.01	0.00	0.00
3.74	30.75	19.15	12.67	9.69	6.86	4.84	3.29	2.17	1.65	1.13	0.83	0.59	0.41	0.32	0.23	0.17	0.12	0.08	0.07	0.06	0.04	0.03	0.03	0.02	0.02	0.01	0.01	0.01	0.01	0.01	0.01	0.00
3.38	27.60	19.01	12.57	9.61	6.81	4.81	3.27	2.15	1.63	1.12	0.83	0.58	0.41	0.31	0.23	0.17	0.12	0.08	0.07	0.06	0.04	0.03	0.03	0.02	0.02	0.01	0.01	0.01	0.01	0.01	0.01	0.00
3.06	25.12	19.07	12.61	9.65	6.83	4.82	3.28	2.16	1.64	1.12	0.83	0.59	0.41	0.32	0.23	0.17	0.12	0.08	0.07	0.06	0.04	0.03	0.03	0.02	0.02	0.01	0.01	0.01	0.01	0.01	0.01	0.00
2.79	22.65	18.88	12.49	9.55	6.77	4.78	3.25	2.14	1.62	1.11	0.82	0.58	0.41	0.31	0.23	0.17	0.11	0.08	0.07	0.06	0.04	0.03	0.03	0.02	0.02	0.01	0.01	0.01	0.01	0.01	0.01	0.00
2.55	20.73	18.93	12.52	9.57	6.78	4.79	3.26	2.14	1.63	1.11	0.82	0.58	0.41	0.31	0.23	0.17	0.11	0.08	0.07	0.06	0.04	0.03	0.03	0.02	0.02	0.01	0.01	0.01	0.01	0.01	0.01	0.00
2.33	18.95	18.91	12.51	9.56	6.77	4.78	3.25	2.14	1.63	1.11	0.82	0.58	0.41	0.31	0.23	0.17	0.11	0.08	0.07	0.06	0.04	0.03	0.03	0.02	0.02	0.01	0.01	0.01	0.01	0.01	0.01	0.00

DISCO DRIVES (KING'S LYNN) LIMITED, OLDMEDOW ROAD, HARDWICK INDUSTRIAL ESTATE, KING'S LYNN, NORFOLK. PE30 4LE.
TEL: +44(0)1553 761331, FAX: +44(0)1553 692137, WEB: www.discodrives.co.uk, EMAIL: sales@discodrives.co.uk

	kW	0.06	0.09	0.12	0.18	0.25	0.37	0.55	0.75	1.10	1.50	2.20	3.00	4.00	5.50	7.50	11.00	15.00	18.50	22.00	30.00	37.00	45.00	55.00	75.00	90.00	110.00	132.00	160.00	200.00	250.00	315.00
RATIO	NM	0.43	0.65	0.85	1.20	1.70	2.50	3.80	5.00	7.30	9.90	14.00	20.00	26.00	36.00	49.00	71.00	97.00	120.00	142.00	194.00	238.00	289.00	354.00	482.00	579.00	707.00	849.00	1029.00	1286.00	1602.00	2019.00
115.92	161.46	3.24	2.14	1.64	1.16	0.82	0.56	0.37	0.28	0.19	0.14	0.10	0.07	0.05	0.04	0.03	0.02	0.01	0.01	0.01	0.01	0.01	0.00	0.00	0.00	0.00	0.00	0.00	0.00	0.00	0.00	0.00
101.95	156.65	3.57	2.36	1.81	1.28	0.90	0.61	0.40	0.31	0.21	0.16	0.11	0.08	0.06	0.04	0.03	0.02	0.02	0.01	0.01	0.01	0.01	0.01	0.00	0.00	0.00	0.00	0.00	0.00	0.00	0.00	0.00
90.30	154.46	3.98	2.63	2.01	1.43	1.01	0.68	0.45	0.34	0.23	0.17	0.12	0.09	0.07	0.05	0.03	0.02	0.02	0.01	0.01	0.01	0.01	0.01	0.00	0.00	0.00	0.00	0.00	0.00	0.00	0.00	0.00
81.42	149.79	4.28	2.83	2.16	1.53	1.08	0.74	0.48	0.37	0.25	0.19	0.13	0.09	0.07	0.05	0.04	0.03	0.02	0.02	0.01	0.01	0.01	0.01	0.01	0.00	0.00	0.00	0.00	0.00	0.00	0.00	0.00
72.12	146.22	4.71	3.12	2.39	1.69	1.19	0.81	0.53	0.41	0.28	0.20	0.14	0.10	0.08	0.06	0.04	0.03	0.02	0.02	0.01	0.01	0.01	0.01	0.01	0.00	0.00	0.00	0.00	0.00	0.00	0.00	0.00
65.03	143.13	5.12	3.39	2.59	1.83	1.29	0.88	0.58	0.44	0.30	0.22	0.16	0.11	0.08	0.06	0.04	0.03	0.02	0.02	0.02	0.01	0.01	0.01	0.01	0.00	0.00	0.00	0.00	0.00	0.00	0.00	0.00
57.81	139.35	5.61	3.71	2.84	2.01	1.42	0.96	0.63	0.48	0.33	0.24	0.17	0.12	0.09	0.07	0.05	0.03	0.02	0.02	0.02	0.01	0.01	0.01	0.01	0.01	0.00	0.00	0.00	0.00	0.00	0.00	0.00
53.20	136.61	5.97	3.95	3.02	2.14	1.51	1.03	0.68	0.51	0.35	0.26	0.18	0.13	0.10	0.07	0.05	0.04	0.03	0.02	0.02	0.01	0.01	0.01	0.01	0.01	0.00	0.00	0.00	0.00	0.00	0.00	0.00
47.75	129.88	6.33	4.18	3.20	2.27	1.60	1.09	0.72	0.54	0.37	0.27	0.19	0.14	0.10	0.08	0.06	0.04	0.03	0.02	0.02	0.01	0.01	0.01	0.01	0.01	0.00	0.00	0.00	0.00	0.00	0.00	0.00
44.10	126.31	6.66	4.41	3.37	2.39	1.68	1.15	0.75	0.57	0.39	0.29	0.20	0.14	0.11	0.08	0.06	0.04	0.03	0.02	0.02	0.01	0.01	0.01	0.01	0.01	0.00	0.00	0.00	0.00	0.00	0.00	0.00
39.85	121.51	7.09	4.69	3.59	2.54	1.79	1.22	0.80	0.61	0.42	0.31	0.22	0.15	0.12	0.08	0.06	0.04	0.03	0.03	0.02	0.02	0.01	0.01	0.01	0.01	0.01	0.00	0.00	0.00	0.00	0.00	0.00
33.98	119.79	8.20	5.42	4.15	2.94	2.07	1.41	0.93	0.71	0.48	0.36	0.25	0.18	0.14	0.10	0.07	0.05	0.04	0.03	0.02	0.02	0.01	0.01	0.01	0.01	0.01	0.00	0.00	0.00	0.00	0.00	0.00
31.27	115.67	8.60	5.69	4.35	3.08	2.18	1.48	0.97	0.74	0.51	0.37	0.26	0.18	0.14	0.10	0.08	0.05	0.04	0.03	0.03	0.02	0.02	0.01	0.01	0.01	0.01	0.01	0.00	0.00	0.00	0.00	0.00
28.06	113.95	9.44	6.25	4.78	3.38	2.39	1.62	1.07	0.81	0.56	0.41	0.29	0.20	0.16	0.11	0.08	0.06	0.04	0.03	0.03	0.02	0.02	0.01	0.01	0.01	0.01	0.01	0.00	0.00	0.00	0.00	0.00
24.84	106.27	9.95	6.58	5.03	3.57	2.52	1.71	1.13	0.86	0.59	0.43	0.31	0.21	0.16	0.12	0.09	0.06	0.04	0.04	0.03	0.02	0.02	0.01	0.01	0.01	0.01	0.01	0.01	0.00	0.00	0.00	0.00
21.85	104.34	11.11	7.35	5.62	3.98	2.81	1.91	1.26	0.96	0.65	0.48	0.34	0.24	0.18	0.13	0.10	0.07	0.05	0.04	0.03	0.02	0.02	0.02	0.01	0.01	0.01	0.01	0.01	0.00	0.00	0.00	0.00
19.35	100.23	12.05	7.97	6.09	4.32	3.05	2.07	1.36	1.04	0.71	0.52	0.37	0.26	0.20	0.14	0.11	0.07	0.05	0.04	0.04	0.03	0.02	0.02	0.01	0.01	0.01	0.01	0.01	0.01	0.00	0.00	0.00
17.45	93.50	12.46	8.25	6.31	4.47	3.15	2.14	1.41	1.07	0.73	0.54	0.38	0.27	0.21	0.15	0.11	0.08	0.06	0.04	0.04	0.03	0.02	0.02	0.02	0.01	0.01	0.01	0.01	0.01	0.00	0.00	0.00
15.46	87.18	13.12	8.68	6.64	4.70	3.32	2.26	1.48	1.13	0.77	0.57	0.40	0.28	0.22	0.16	0.12	0.08	0.06	0.05	0.04	0.03	0.02	0.02	0.02	0.01	0.01	0.01	0.01	0.01	0.00	0.00	0.00
13.94	85.53	14.27	9.44	7.22	5.11	3.61	2.46	1.62	1.23	0.84	0.62	0.44	0.31	0.24	0.17	0.13	0.09	0.06	0.05	0.04	0.03	0.03	0.02	0.02	0.01	0.01	0.01	0.01	0.01	0.00	0.00	0.00
12.39	79.70	14.96	9.90	7.57	5.36	3.78	2.57	1.69	1.29	0.88	0.65	0.46	0.32	0.25	0.18	0.13	0.09	0.07	0.05	0.05	0.03	0.03	0.02	0.02	0.01	0.01	0.01	0.01	0.01	0.01	0.00	0.00
11.40	74.48	15.19	10.05	7.69	5.44	3.84	2.61	1.72	1.31	0.89	0.66	0.47	0.33	0.25	0.18	0.13	0.09	0.07	0.05	0.05	0.03	0.03	0.02	0.02	0.01	0.01	0.01	0.01	0.01	0.01	0.00	0.00
10.23	70.02	15.92	10.53	8.05	5.70	4.03	2.74	1.80	1.37	0.94	0.69	0.49	0.34	0.26	0.19	0.14	0.10	0.07	0.06	0.05	0.04	0.03	0.02	0.02	0.01	0.01	0.01	0.01	0.01	0.01	0.00	0.00
9.45	65.90	16.22	10.73	8.20	5.81	4.10	2.79	1.84	1.39	0.96	0.70	0.50	0.35	0.27	0.19	0.14	0.10	0.07	0.06	0.05	0.04	0.03	0.02	0.02	0.01	0.01	0.01	0.01	0.01	0.01	0.00	0.00
8.54	61.30	16.69	11.04	8.45	5.98	4.22	2.87	1.89	1.44	0.98	0.73	0.51	0.36	0.28	0.20	0.15	0.10	0.07	0.06	0.05	0.04	0.03	0.02	0.02	0.01	0.01	0.01	0.01	0.01	0.01	0.00	0.00
8.19	58.35	16.57	10.96	8.38	5.94	4.19	2.85	1.87	1.42	0.98	0.72	0.51	0.36	0.27	0.20	0.15	0.10	0.07	0.06	0.05	0.04	0.03	0.02	0.02	0.01	0.01	0.01	0.01	0.01	0.01	0.00	0.00
7.28	54.10	17.28	11.43	8.74	6.19	4.37	2.97	1.96	1.49	1.02	0.75	0.53	0.37	0.29	0.21	0.15	0.10	0.08	0.06	0.05	0.04	0.03	0.03	0.02	0.02	0.01	0.01	0.01	0.01	0.01	0.00	0.00
6.70	49.56	17.20	11.38	8.70	6.16	4.35	2.96	1.95	1.48	1.01	0.75	0.53	0.37	0.28	0.21	0.15	0.10	0.08	0.06	0.05	0.04	0.03	0.03	0.02	0.02	0.01	0.01	0.01	0.01	0.01	0.00	0.00
6.01	46.33	17.92	11.85	9.06	6.42	4.53	3.08	2.03	1.54	1.06	0.78	0.55	0.39	0.30	0.21	0.16	0.11	0.08	0.06	0.05	0.04	0.03	0.03	0.02	0.02	0.01	0.01	0.01	0.01	0.01	0.00	0.00
5.55	43.18	18.08	11.96	9.15	6.48	4.57	3.11	2.05	1.55	1.06	0.79	0.56	0.39	0.30	0.22	0.16	0.11	0.08	0.06	0.05	0.04	0.03	0.03	0.02	0.02	0.01	0.01	0.01	0.01	0.01	0.00	0.00
5.02	40.50	18.77	12.41	9.49	6.72	4.75	3.23	2.12	1.61	1.11	0.82	0.58	0.40	0.31	0.22	0.16	0.11	0.08	0.07	0.06	0.04	0.03	0.03	0.02	0.02	0.01	0.01	0.01	0.01	0.01	0.01	0.00
4.72	27.32	13.46	8.90	6.81	4.82	3.40	2.31	1.52	1.16	0.79	0.58	0.41	0.29	0.22	0.16	0.12	0.08	0.06	0.05	0.04	0.03	0.02	0.02	0.02	0.01	0.01	0.01	0.01	0.01	0.00	0.00	0.00
4.18	26.98	15.00	9.92	7.59	5.37	3.79	2.58	1.70	1.29	0.88	0.65	0.46	0.32	0.25	0.18	0.13	0.09	0.07	0.05	0.05	0.03	0.03	0.02	0.02	0.01	0.01	0.01	0.01	0.01	0.01	0.00	0.00
3.77	26.64	16.42	10.86	8.31	5.88	4.15	2.82	1.86	1.41	0.97	0.71	0.50	0.35	0.27	0.20	0.14	0.10	0.07	0.06	0.05	0.04	0.03	0.02	0.02	0.01	0.01	0.01	0.01	0.01	0.01	0.00	0.00
3.35	25.74	17.85	11.81	9.03	6.40	4.52	3.07	2.02	1.54	1.05	0.78	0.55	0.38	0.30	0.21	0.16	0.11	0.08	0.06	0.05	0.04	0.03	0.03	0.02	0.02	0.01	0.01	0.01	0.01	0.01	0.00	0.00
3.09	24.99	18.84	12.46	9.53	6.75	4.76	3.24	2.13	1.62	1.11	0.82	0.58	0.40	0.31	0.22	0.17	0.11	0.08	0.07	0.06	0.04	0.03	0.03	0.02	0.02	0.01	0.01	0.01	0.01	0.01	0.01	0.00
2.77	24.02	20.18	13.35	10.21	7.23	5.10	3.47	2.28	1.74	1.19	0.88	0.62	0.43	0.33	0.24	0.18	0.12	0.09	0.07	0.06	0.04	0.04	0.03	0.02	0.02	0.01	0.01	0.01	0.01	0.01	0.01	0.00
2.56	22.58	20.53	13.58	10.39	7.36	5.19	3.53	2.32	1.77	1.21	0.89	0.63	0.44	0.34	0.25	0.18	0.12	0.09	0.07	0.06	0.05	0.04	0.03	0.02	0.02	0.02	0.01	0.01	0.01	0.01	0.01	0.00
2.31	21.28	21.41	14.16	10.83	7.67	5.42	3.68	2.42	1.84	1.26	0.93	0.66	0.46	0.35	0.26	0.19	0.13	0.09	0.08	0.06	0.05	0.04	0.03	0.03	0.02	0.02	0.01	0.01	0.01	0.01	0.01	0.00

DISCO DRIVES (KING'S LYNN) LIMITED, OLDMEDOW ROAD, HARDWICK INDUSTRIAL ESTATE, KING'S LYNN, NORFOLK. PE30 4LE.
TEL: +44(0)1553 761331, FAX: +44(0)1553 692137, WEB: www.discodrives.co.uk, EMAIL: sales@discodrives.co.uk

	kW	0.06	0.09	0.12	0.18	0.25	0.37	0.55	0.75	1.10	1.50	2.20	3.00	4.00	5.50	7.50	11.00	15.00	18.50	22.00	30.00	37.00	45.00	55.00	75.00	90.00	110.00	132.00	160.00	200.00	250.00	315.00
RATIO	NM	0.43	0.65	0.85	1.20	1.70	2.50	3.80	5.00	7.30	9.90	14.00	20.00	26.00	36.00	49.00	71.00	97.00	120.00	142.00	194.00	238.00	289.00	354.00	482.00	579.00	707.00	849.00	1029.00	1286.00	1602.00	2019.00
115.92	353.19	7.09	4.69	3.58	2.54	1.79	1.22	0.80	0.61	0.42	0.31	0.22	0.15	0.12	0.08	0.06	0.04	0.03	0.03	0.02	0.02	0.01	0.01	0.01	0.01	0.01	0.00	0.00	0.00	0.00	0.00	0.00
101.95	338.09	7.71	5.10	3.90	2.76	1.95	1.33	0.87	0.66	0.45	0.33	0.24	0.17	0.13	0.09	0.07	0.05	0.03	0.03	0.02	0.02	0.01	0.01	0.01	0.01	0.01	0.00	0.00	0.00	0.00	0.00	0.00
90.30	331.56	8.54	5.65	4.32	3.06	2.16	1.47	0.97	0.73	0.50	0.37	0.26	0.18	0.14	0.10	0.07	0.05	0.04	0.03	0.03	0.02	0.02	0.01	0.01	0.01	0.01	0.01	0.00	0.00	0.00	0.00	0.00
81.42	317.15	9.06	5.99	4.58	3.25	2.29	1.56	1.03	0.78	0.53	0.39	0.28	0.19	0.15	0.11	0.08	0.05	0.04	0.03	0.03	0.02	0.02	0.01	0.01	0.01	0.01	0.01	0.00	0.00	0.00	0.00	0.00
72.12	303.42	9.78	6.47	4.95	3.51	2.47	1.68	1.11	0.84	0.58	0.42	0.30	0.21	0.16	0.12	0.09	0.06	0.04	0.04	0.03	0.02	0.02	0.01	0.01	0.01	0.01	0.01	0.00	0.00	0.00	0.00	0.00
65.03	303.42	10.85	7.18	5.49	3.89	2.74	1.87	1.23	0.93	0.64	0.47	0.33	0.23	0.18	0.13	0.10	0.07	0.05	0.04	0.03	0.02	0.02	0.02	0.01	0.01	0.01	0.01	0.01	0.00	0.00	0.00	0.00
57.81	300.67	12.10	8.00	6.12	4.33	3.06	2.08	1.37	1.04	0.71	0.53	0.37	0.26	0.20	0.14	0.11	0.07	0.05	0.04	0.04	0.03	0.02	0.02	0.01	0.01	0.01	0.01	0.01	0.01	0.00	0.00	0.00
53.20	289.00	12.63	8.36	6.39	4.53	3.20	2.17	1.43	1.09	0.74	0.55	0.39	0.27	0.21	0.15	0.11	0.08	0.06	0.05	0.04	0.03	0.02	0.02	0.02	0.01	0.01	0.01	0.01	0.01	0.00	0.00	0.00
47.75	276.65	13.47	8.91	6.82	4.83	3.41	2.32	1.52	1.16	0.79	0.59	0.41	0.29	0.22	0.16	0.12	0.08	0.06	0.05	0.04	0.03	0.02	0.02	0.02	0.01	0.01	0.01	0.01	0.01	0.00	0.00	0.00
44.10	269.09	14.19	9.39	7.18	5.08	3.59	2.44	1.61	1.22	0.84	0.62	0.44	0.31	0.23	0.17	0.12	0.09	0.06	0.05	0.04	0.03	0.03	0.02	0.02	0.01	0.01	0.01	0.01	0.01	0.00	0.00	0.00
39.85	256.74	14.98	9.91	7.58	5.37	3.79	2.58	1.70	1.29	0.88	0.65	0.46	0.32	0.25	0.18	0.13	0.09	0.07	0.05	0.05	0.03	0.03	0.02	0.02	0.01	0.01	0.01	0.01	0.01	0.01	0.00	0.00
33.98	246.44	16.87	11.16	8.53	6.04	4.27	2.90	1.91	1.45	0.99	0.73	0.52	0.36	0.28	0.20	0.15	0.10	0.07	0.06	0.05	0.04	0.03	0.03	0.02	0.02	0.01	0.01	0.01	0.01	0.01	0.00	0.00
31.27	240.26	17.87	11.82	9.04	6.40	4.52	3.07	2.02	1.54	1.05	0.78	0.55	0.38	0.30	0.21	0.16	0.11	0.08	0.06	0.05	0.04	0.03	0.03	0.02	0.02	0.01	0.01	0.01	0.01	0.01	0.00	0.00
28.06	228.59	18.94	12.53	9.58	6.79	4.79	3.26	2.14	1.63	1.12	0.82	0.58	0.41	0.31	0.23	0.17	0.11	0.08	0.07	0.06	0.04	0.03	0.03	0.02	0.02	0.01	0.01	0.01	0.01	0.01	0.01	0.00
24.84	223.79	20.95	13.86	10.60	7.51	5.30	3.60	2.37	1.80	1.23	0.91	0.64	0.45	0.35	0.25	0.18	0.13	0.09	0.08	0.06	0.05	0.04	0.03	0.03	0.02	0.02	0.01	0.01	0.01	0.01	0.01	0.00
21.85	212.12	22.58	14.94	11.42	8.09	5.71	3.88	2.56	1.94	1.33	0.98	0.69	0.49	0.37	0.27	0.20	0.14	0.10	0.08	0.07	0.05	0.04	0.03	0.03	0.02	0.02	0.01	0.01	0.01	0.01	0.01	0.00
19.35	199.07	23.93	15.83	12.10	8.57	6.05	4.12	2.71	2.06	1.41	1.04	0.73	0.51	0.40	0.29	0.21	0.14	0.11	0.09	0.07	0.05	0.04	0.04	0.03	0.02	0.02	0.01	0.01	0.01	0.01	0.01	0.01
17.45	187.61	25.01	16.54	12.65	8.96	6.33	4.30	2.83	2.15	1.47	1.09	0.77	0.54	0.41	0.30	0.22	0.15	0.11	0.09	0.08	0.06	0.05	0.04	0.03	0.02	0.02	0.02	0.01	0.01	0.01	0.01	0.01
15.46	175.39	26.39	17.46	13.35	9.46	6.68	4.54	2.99	2.27	1.55	1.15	0.81	0.57	0.44	0.32	0.23	0.16	0.12	0.09	0.08	0.06	0.05	0.04	0.03	0.02	0.02	0.02	0.01	0.01	0.01	0.01	0.01
13.94	170.93	28.53	18.87	14.43	10.22	7.22	4.91	3.23	2.45	1.68	1.24	0.88	0.61	0.47	0.34	0.25	0.17	0.13	0.10	0.09	0.06	0.05	0.04	0.03	0.03	0.02	0.02	0.01	0.01	0.01	0.01	0.01
12.39	158.57	29.77	19.69	15.06	10.67	7.53	5.12	3.37	2.56	1.75	1.29	0.91	0.64	0.49	0.36	0.26	0.18	0.13	0.11	0.09	0.07	0.05	0.04	0.04	0.03	0.02	0.02	0.02	0.01	0.01	0.01	0.01
11.40	148.96	30.39	20.10	15.37	10.89	7.69	5.23	3.44	2.61	1.79	1.32	0.93	0.65	0.50	0.36	0.27	0.18	0.13	0.11	0.09	0.07	0.05	0.05	0.04	0.03	0.02	0.02	0.02	0.01	0.01	0.01	0.01
10.23	139.35	31.67	20.95	16.02	11.35	8.01	5.45	3.58	2.72	1.87	1.38	0.97	0.68	0.52	0.38	0.28	0.19	0.14	0.11	0.10	0.07	0.06	0.05	0.04	0.03	0.02	0.02	0.02	0.01	0.01	0.01	0.01
9.45	131.12	32.27	21.35	16.32	11.56	8.16	5.55	3.65	2.77	1.90	1.40	0.99	0.69	0.53	0.39	0.28	0.20	0.14	0.12	0.10	0.07	0.06	0.05	0.04	0.03	0.02	0.02	0.02	0.01	0.01	0.01	0.01
8.54	123.22	33.56	22.20	16.98	12.02	8.49	5.77	3.80	2.89	1.98	1.46	1.03	0.72	0.55	0.40	0.29	0.20	0.15	0.12	0.10	0.07	0.06	0.05	0.04	0.03	0.02	0.02	0.02	0.01	0.01	0.01	0.01
8.19	117.73	33.43	22.11	16.91	11.98	8.45	5.75	3.78	2.87	1.97	1.45	1.03	0.72	0.55	0.40	0.29	0.20	0.15	0.12	0.10	0.07	0.06	0.05	0.04	0.03	0.02	0.02	0.02	0.01	0.01	0.01	0.01
7.28	109.15	34.86	23.06	17.64	12.49	8.82	6.00	3.94	3.00	2.05	1.51	1.07	0.75	0.58	0.42	0.31	0.21	0.15	0.12	0.11	0.08	0.06	0.05	0.04	0.03	0.03	0.02	0.02	0.01	0.01	0.01	0.01
6.70	101.46	35.21	23.30	17.81	12.62	8.91	6.06	3.98	3.03	2.07	1.53	1.08	0.76	0.58	0.42	0.31	0.21	0.16	0.13	0.11	0.08	0.06	0.05	0.04	0.03	0.03	0.02	0.02	0.01	0.01	0.01	0.01
6.01	93.91	36.31	24.02	18.37	13.01	9.19	6.25	4.11	3.12	2.14	1.58	1.12	0.78	0.60	0.43	0.32	0.22	0.16	0.13	0.11	0.08	0.07	0.05	0.04	0.03	0.03	0.02	0.02	0.02	0.01	0.01	0.01
5.55	88.21	36.93	24.43	18.68	13.23	9.34	6.35	4.18	3.18	2.18	1.60	1.13	0.79	0.61	0.44	0.32	0.22	0.16	0.13	0.11	0.08	0.07	0.05	0.04	0.03	0.03	0.02	0.02	0.02	0.01	0.01	0.01
5.02	82.38	38.17	25.25	19.31	13.68	9.65	6.56	4.32	3.28	2.25	1.66	1.17	0.82	0.63	0.46	0.33	0.23	0.17	0.14	0.12	0.08	0.07	0.06	0.05	0.03	0.03	0.02	0.02	0.02	0.01	0.01	0.01
4.72	50.60	24.92	16.48	12.61	8.93	6.30	4.29	2.82	2.14	1.47	1.08	0.77	0.54	0.41	0.30	0.22	0.15	0.11	0.09	0.08	0.06	0.05	0.04	0.03	0.02	0.02	0.02	0.01	0.01	0.01	0.01	0.01
4.18	50.11	27.86	18.43	14.09	9.98	7.05	4.79	3.15	2.40	1.64	1.21	0.86	0.60	0.46	0.33	0.24	0.17	0.12	0.10	0.08	0.06	0.05	0.04	0.03	0.02	0.02	0.02	0.01	0.01	0.01	0.01	0.01
3.77	49.77	30.69	20.30	15.52	11.00	7.76	5.28	3.47	2.64	1.81	1.33	0.94	0.66	0.51	0.37	0.27	0.19	0.14	0.11	0.09	0.07	0.06	0.05	0.04	0.03	0.02	0.02	0.02	0.01	0.01	0.01	0.01
3.35	48.40	33.57	22.21	16.98	12.03	8.49	5.77	3.80	2.89	1.98	1.46	1.03	0.72	0.56	0.40	0.29	0.20	0.15	0.12	0.10	0.07	0.06	0.05	0.04	0.03	0.02	0.02	0.02	0.01	0.01	0.01	0.01
3.09	47.64	35.91	23.76	18.17	12.87	9.08	6.18	4.06	3.09	2.12	1.56	1.10	0.77	0.59	0.43	0.32	0.22	0.16	0.13	0.11	0.08	0.06	0.05	0.04	0.03	0.03	0.02	0.02	0.02	0.01	0.01	0.01
2.77	45.10	37.88	25.06	19.16	13.57	9.58	6.51	4.29	3.26	2.23	1.65	1.16	0.81	0.63	0.45	0.33	0.23	0.17	0.14	0.11	0.08	0.07	0.06	0.05	0.03	0.03	0.02	0.02	0.02	0.01	0.01	0.01
2.56	44.07	40.07	26.51	20.27	14.36	10.14	6.89	4.53	3.45	2.36	1.74	1.23	0.86	0.66	0.48	0.35	0.24	0.18	0.14	0.12	0.09	0.07	0.06	0.05	0.04	0.03	0.02	0.02	0.02	0.01	0.01	0.01
2.31	41.26	41.51	27.46	21.00	14.88	10.50	7.14	4.70	3.57	2.45	1.80	1.28	0.89	0.69	0.50	0.36	0.25	0.18	0.15	0.13	0.09	0.08	0.06	0.05	0.04	0.03	0.03	0.02	0.02	0.01	0.01	0.01

	kW	0.06	0.09	0.12	0.18	0.25	0.37	0.55	0.75	1.10	1.50	2.20	3.00	4.00	5.50	7.50	11.00	15.00	18.50	22.00	30.00	37.00	45.00	55.00	75.00	90.00	110.00	132.00	160.00	200.00	250.00	315.00
RATIO	NM	0.43	0.65	0.85	1.20	1.70	2.50	3.80	5.00	7.30	9.90	14.00	20.00	26.00	36.00	49.00	71.00	97.00	120.00	142.00	194.00	238.00	289.00	354.00	482.00	579.00	707.00	849.00	1029.00	1286.00	1602.00	2019.00
117.98	873.19	17.21	11.39	8.71	6.17	4.35	2.96	1.95	1.48	1.01	0.75	0.53	0.37	0.28	0.21	0.15	0.10	0.08	0.06	0.05	0.04	0.03	0.03	0.02	0.02	0.01	0.01	0.01	0.01	0.01	0.00	0.00
101.81	783.26	17.89	11.84	9.05	6.41	4.53	3.08	2.02	1.54	1.05	0.78	0.55	0.38	0.30	0.21	0.16	0.11	0.08	0.06	0.05	0.04	0.03	0.03	0.02	0.02	0.01	0.01	0.01	0.01	0.01	0.00	0.00
90.53	777.76	19.98	13.22	10.11	7.16	5.05	3.44	2.26	1.72	1.18	0.87	0.61	0.43	0.33	0.24	0.18	0.12	0.09	0.07	0.06	0.04	0.04	0.03	0.02	0.02	0.01	0.01	0.01	0.01	0.01	0.01	0.00
80.64	775.71	22.37	14.80	11.32	8.02	5.66	3.85	2.53	1.92	1.32	0.97	0.69	0.48	0.37	0.27	0.20	0.14	0.10	0.08	0.07	0.05	0.04	0.03	0.03	0.02	0.02	0.01	0.01	0.01	0.01	0.01	0.00
72.45	770.22	24.72	16.36	12.51	8.86	6.25	4.25	2.80	2.13	1.46	1.07	0.76	0.53	0.41	0.30	0.22	0.15	0.11	0.09	0.07	0.05	0.04	0.04	0.03	0.02	0.02	0.02	0.01	0.01	0.01	0.01	0.01
64.80	768.84	27.59	18.25	13.96	9.89	6.98	4.75	3.12	2.37	1.63	1.20	0.85	0.59	0.46	0.33	0.24	0.17	0.12	0.10	0.08	0.06	0.05	0.04	0.03	0.02	0.02	0.02	0.01	0.01	0.01	0.01	0.01
58.36	767.47	30.58	20.23	15.47	10.96	7.74	5.26	3.46	2.63	1.80	1.33	0.94	0.66	0.51	0.37	0.27	0.19	0.14	0.11	0.09	0.07	0.06	0.05	0.04	0.03	0.02	0.02	0.02	0.01	0.01	0.01	0.01
52.92	749.62	32.94	21.79	16.66	11.80	8.33	5.67	3.73	2.83	1.94	1.43	1.01	0.71	0.54	0.39	0.29	0.20	0.15	0.12	0.10	0.07	0.06	0.05	0.04	0.03	0.02	0.02	0.02	0.01	0.01	0.01	0.01
48.06	713.92	34.55	22.86	17.48	12.38	8.74	5.94	3.91	2.97	2.04	1.50	1.06	0.74	0.57	0.41	0.30	0.21	0.15	0.12	0.10	0.08	0.06	0.05	0.04	0.03	0.03	0.02	0.02	0.01	0.01	0.01	0.01
44.24	693.33	36.45	24.11	18.44	13.06	9.22	6.27	4.12	3.13	2.15	1.58	1.12	0.78	0.60	0.44	0.32	0.22	0.16	0.13	0.11	0.08	0.07	0.05	0.04	0.03	0.03	0.02	0.02	0.02	0.01	0.01	0.01
39.90	674.11	39.29	25.99	19.88	14.08	9.94	6.76	4.45	3.38	2.31	1.71	1.21	0.84	0.65	0.47	0.34	0.24	0.17	0.14	0.12	0.09	0.07	0.06	0.05	0.04	0.03	0.02	0.02	0.02	0.01	0.01	0.01
34.30	630.18	42.73	28.26	21.61	15.31	10.81	7.35	4.83	3.67	2.52	1.86	1.31	0.92	0.71	0.51	0.37	0.26	0.19	0.15	0.13	0.09	0.08	0.06	0.05	0.04	0.03	0.03	0.02	0.02	0.01	0.01	0.01
31.10	616.45	46.09	30.49	23.32	16.52	11.66	7.93	5.22	3.96	2.71	2.00	1.42	0.99	0.76	0.55	0.40	0.28	0.20	0.17	0.14	0.10	0.08	0.07	0.06	0.04	0.03	0.03	0.02	0.02	0.02	0.01	0.01
28.25	592.42	48.78	32.27	24.68	17.48	12.34	8.39	5.52	4.19	2.87	2.12	1.50	1.05	0.81	0.58	0.43	0.30	0.22	0.17	0.15	0.11	0.09	0.07	0.06	0.04	0.04	0.03	0.02	0.02	0.02	0.01	0.01
25.28	531.32	48.87	32.33	24.72	17.51	12.36	8.41	5.53	4.20	2.88	2.12	1.50	1.05	0.81	0.58	0.43	0.30	0.22	0.18	0.15	0.11	0.09	0.07	0.06	0.04	0.04	0.03	0.02	0.02	0.02	0.01	0.01
21.82	488.76	52.10	34.47	26.36	18.67	13.18	8.96	5.90	4.48	3.07	2.26	1.60	1.12	0.86	0.62	0.46	0.32	0.23	0.19	0.16	0.12	0.09	0.08	0.06	0.05	0.04	0.03	0.03	0.02	0.02	0.01	0.01
19.40	453.07	54.31	35.93	27.48	19.46	13.74	9.34	6.15	4.67	3.20	2.36	1.67	1.17	0.90	0.65	0.48	0.33	0.24	0.19	0.16	0.12	0.10	0.08	0.07	0.05	0.04	0.03	0.03	0.02	0.02	0.01	0.01
17.28	418.75	56.36	37.28	28.51	20.19	14.25	9.69	6.38	4.85	3.32	2.45	1.73	1.21	0.93	0.67	0.49	0.34	0.25	0.20	0.17	0.12	0.10	0.08	0.07	0.05	0.04	0.03	0.03	0.02	0.02	0.02	0.01
15.53	391.29	58.61	38.77	29.65	21.00	14.83	10.08	6.63	5.04	3.45	2.55	1.80	1.26	0.97	0.70	0.51	0.35	0.26	0.21	0.18	0.13	0.11	0.09	0.07	0.05	0.04	0.04	0.03	0.02	0.02	0.02	0.01
13.89	378.93	63.46	41.98	32.11	22.74	16.05	10.92	7.18	5.46	3.74	2.76	1.95	1.36	1.05	0.76	0.56	0.38	0.28	0.23	0.19	0.14	0.11	0.09	0.08	0.06	0.05	0.04	0.03	0.03	0.02	0.02	0.01
12.51	358.34	66.64	44.08	33.71	23.88	16.86	11.46	7.54	5.73	3.93	2.89	2.05	1.43	1.10	0.80	0.58	0.40	0.30	0.24	0.20	0.15	0.12	0.10	0.08	0.06	0.05	0.04	0.03	0.03	0.02	0.02	0.01
11.34	332.93	68.28	45.17	34.54	24.47	17.27	11.74	7.73	5.87	4.02	2.97	2.10	1.47	1.13	0.82	0.60	0.41	0.30	0.24	0.21	0.15	0.12	0.10	0.08	0.06	0.05	0.04	0.03	0.03	0.02	0.02	0.01
10.30	313.71	70.85	46.87	35.84	25.39	17.92	12.19	8.02	6.09	4.17	3.08	2.18	1.52	1.17	0.85	0.62	0.43	0.31	0.25	0.21	0.16	0.13	0.11	0.09	0.06	0.05	0.04	0.04	0.03	0.02	0.02	0.02
9.48	293.80	72.07	47.68	36.46	25.83	18.23	12.40	8.16	6.20	4.25	3.13	2.21	1.55	1.19	0.86	0.63	0.44	0.32	0.26	0.22	0.16	0.13	0.11	0.09	0.06	0.05	0.04	0.04	0.03	0.02	0.02	0.02
8.55	275.96	75.06	49.66	37.97	26.90	18.99	12.91	8.49	6.46	4.42	3.26	2.31	1.61	1.24	0.90	0.66	0.45	0.33	0.27	0.23	0.17	0.14	0.11	0.09	0.07	0.06	0.05	0.04	0.03	0.03	0.02	0.02
8.16	265.66	75.70	50.08	38.30	27.13	19.15	13.02	8.57	6.51	4.46	3.29	2.33	1.63	1.25	0.90	0.66	0.46	0.34	0.27	0.23	0.17	0.14	0.11	0.09	0.07	0.06	0.05	0.04	0.03	0.03	0.02	0.02
7.35	248.50	78.63	52.01	39.78	28.17	19.89	13.52	8.90	6.76	4.63	3.42	2.41	1.69	1.30	0.94	0.69	0.48	0.35	0.28	0.24	0.17	0.14	0.12	0.10	0.07	0.06	0.05	0.04	0.03	0.03	0.02	0.02
6.67	231.34	80.72	53.40	40.83	28.92	20.42	13.88	9.13	6.94	4.75	3.51	2.48	1.74	1.33	0.96	0.71	0.49	0.36	0.29	0.24	0.18	0.15	0.12	0.10	0.07	0.06	0.05	0.04	0.03	0.03	0.02	0.02
6.05	216.24	83.08	54.96	42.03	29.77	21.02	14.29	9.40	7.15	4.89	3.61	2.55	1.79	1.37	0.99	0.73	0.50	0.37	0.30	0.25	0.18	0.15	0.12	0.10	0.07	0.06	0.05	0.04	0.03	0.03	0.02	0.02
5.57	203.88	85.09	56.29	43.05	30.49	21.52	14.64	9.63	7.32	5.01	3.70	2.61	1.83	1.41	1.02	0.75	0.52	0.38	0.30	0.26	0.19	0.15	0.13	0.10	0.08	0.06	0.05	0.04	0.04	0.03	0.02	0.02
5.03	187.61	86.82	57.44	43.92	31.11	21.96	14.93	9.82	7.47	5.11	3.77	2.67	1.87	1.44	1.04	0.76	0.53	0.38	0.31	0.26	0.19	0.16	0.13	0.11	0.08	0.06	0.05	0.04	0.04	0.03	0.02	0.02
4.68	115.67	57.52	38.05	29.10	20.61	14.55	9.89	6.51	4.95	3.39	2.50	1.77	1.24	0.95	0.69	0.50	0.35	0.25	0.21	0.17	0.13	0.10	0.09	0.07	0.05	0.04	0.03	0.03	0.02	0.02	0.02	0.01
4.20	113.95	63.07	41.72	31.90	22.60	15.95	10.85	7.14	5.42	3.71	2.74	1.94	1.36	1.04	0.75	0.55	0.38	0.28	0.23	0.19	0.14	0.11	0.09	0.08	0.06	0.05	0.04	0.03	0.03	0.02	0.02	0.01
3.76	112.92	69.88	46.23	35.35	25.04	17.67	12.02	7.91	6.01	4.12	3.04	2.15	1.50	1.16	0.83	0.61	0.42	0.31	0.25	0.21	0.15	0.13	0.10	0.08	0.06	0.05	0.04	0.04	0.03	0.02	0.02	0.01
3.38	111.90	76.88	50.86	38.89	27.55	19.45	13.22	8.70	6.61	4.53	3.34	2.36	1.65	1.27	0.92	0.67	0.47	0.34	0.28	0.23	0.17	0.14	0.11	0.09	0.07	0.06	0.05	0.04	0.03	0.03	0.02	0.02
3.07	110.94	84.06	55.61	42.52	30.12	21.26	14.46	9.51	7.23	4.95	3.65	2.58	1.81	1.39	1.00	0.74	0.51	0.37	0.30	0.25	0.19	0.15	0.13	0.10	0.07	0.06	0.05	0.04	0.04	0.03	0.02	0.02
2.79	107.09	89.35	59.11	45.20	32.02	22.60	15.37	10.11	7.68	5.26	3.88	2.74	1.92	1.48	1.07	0.78	0.54	0.40	0.32	0.27	0.20	0.16	0.13	0.11	0.08	0.07	0.05	0.05	0.04	0.03	0.02	0.02
2.57	99.54	90.22	59.68	45.64	32.33	22.82	15.52	10.21	7.76	5.31	3.92	2.77	1.94	1.49	1.08	0.79	0.55	0.40	0.32	0.27	0.20	0.16	0.13	0.11	0.08	0.07	0.05	0.05	0.04	0.03	0.02	0.02
2.31	91.71	92.17	60.97	46.63	33.03	23.31	15.85	10.43	7.93	5.43	4.00	2.83	1.98	1.52	1.10	0.81	0.56	0.41	0.33	0.28	0.20	0.17	0.14	0.11	0.08	0.07	0.06	0.05	0.04	0.03	0.02	0.02

DISCO DRIVES (KING'S LYNN) LIMITED, OLDMEDOW ROAD, HARDWICK INDUSTRIAL ESTATE, KING'S LYNN, NORFOLK. PE30 4LE.
TEL: +44(0)1553 761331, FAX: +44(0)1553 692137, WEB: www.discodrives.co.uk, EMAIL: sales@discodrives.co.uk

	kW	0.06	0.09	0.12	0.18	0.25	0.37	0.55	0.75	1.10	1.50	2.20	3.00	4.00	5.50	7.50	11.00	15.00	18.50	22.00	30.00	37.00	45.00	55.00	75.00	90.00	110.00	132.00	160.00	200.00	250.00	315.00
RATIO	NM	0.43	0.65	0.85	1.20	1.70	2.50	3.80	5.00	7.30	9.90	14.00	20.00	26.00	36.00	49.00	71.00	97.00	120.00	142.00	194.00	238.00	289.00	354.00	482.00	579.00	707.00	849.00	1029.00	1286.00	1602.00	2019.00
117.60	1120.31	22.15	14.66	11.21	7.94	5.60	3.81	2.51	1.91	1.30	0.96	0.68	0.48	0.37	0.26	0.19	0.13	0.10	0.08	0.07	0.05	0.04	0.03	0.03	0.02	0.02	0.01	0.01	0.01	0.01	0.01	0.00
102.28	1015.97	23.10	15.28	11.69	8.28	5.84	3.97	2.61	1.99	1.36	1.00	0.71	0.50	0.38	0.28	0.20	0.14	0.10	0.08	0.07	0.05	0.04	0.03	0.03	0.02	0.02	0.01	0.01	0.01	0.01	0.01	0.00
90.19	1009.10	26.02	17.21	13.16	9.32	6.58	4.48	2.94	2.24	1.53	1.13	0.80	0.56	0.43	0.31	0.23	0.16	0.12	0.09	0.08	0.06	0.05	0.04	0.03	0.02	0.02	0.02	0.01	0.01	0.01	0.01	0.01
80.64	961.05	27.72	18.34	14.02	9.93	7.01	4.77	3.14	2.38	1.63	1.20	0.85	0.60	0.46	0.33	0.24	0.17	0.12	0.10	0.08	0.06	0.05	0.04	0.03	0.02	0.02	0.02	0.01	0.01	0.01	0.01	0.01
72.16	950.75	30.64	20.27	15.50	10.98	7.75	5.27	3.47	2.63	1.80	1.33	0.94	0.66	0.51	0.37	0.27	0.19	0.14	0.11	0.09	0.07	0.06	0.05	0.04	0.03	0.02	0.02	0.02	0.01	0.01	0.01	0.01
65.10	949.38	33.91	22.44	17.16	12.15	8.58	5.83	3.84	2.92	2.00	1.47	1.04	0.73	0.56	0.41	0.30	0.21	0.15	0.12	0.10	0.08	0.06	0.05	0.04	0.03	0.03	0.02	0.02	0.01	0.01	0.01	0.01
58.15	945.26	37.80	25.01	19.12	13.55	9.56	6.50	4.28	3.25	2.23	1.64	1.16	0.81	0.63	0.45	0.33	0.23	0.17	0.14	0.11	0.08	0.07	0.06	0.05	0.03	0.03	0.02	0.02	0.02	0.01	0.01	0.01
53.10	941.83	41.25	27.29	20.87	14.78	10.43	7.09	4.67	3.55	2.43	1.79	1.27	0.89	0.68	0.49	0.36	0.25	0.18	0.15	0.12	0.09	0.07	0.06	0.05	0.04	0.03	0.03	0.02	0.02	0.01	0.01	0.01
47.88	939.08	45.61	30.17	23.07	16.34	11.54	7.85	5.16	3.92	2.69	1.98	1.40	0.98	0.75	0.54	0.40	0.28	0.20	0.16	0.14	0.10	0.08	0.07	0.06	0.04	0.03	0.03	0.02	0.02	0.02	0.01	0.01
43.90	935.65	49.57	32.79	25.08	17.76	12.54	8.53	5.61	4.26	2.92	2.15	1.52	1.07	0.82	0.59	0.43	0.30	0.22	0.18	0.15	0.11	0.09	0.07	0.06	0.04	0.04	0.03	0.03	0.02	0.02	0.01	0.01
40.16	918.49	53.18	35.18	26.91	19.06	13.45	9.15	6.02	4.57	3.13	2.31	1.63	1.14	0.88	0.64	0.47	0.32	0.24	0.19	0.16	0.12	0.10	0.08	0.06	0.05	0.04	0.03	0.03	0.02	0.02	0.01	0.01
34.18	859.45	58.48	38.68	29.58	20.95	14.79	10.06	6.62	5.03	3.44	2.54	1.80	1.26	0.97	0.70	0.51	0.35	0.26	0.21	0.18	0.13	0.11	0.09	0.07	0.05	0.04	0.04	0.03	0.02	0.02	0.02	0.01
31.21	840.92	62.66	41.45	31.70	22.45	15.85	10.78	7.09	5.39	3.69	2.72	1.92	1.35	1.04	0.75	0.55	0.38	0.28	0.22	0.19	0.14	0.11	0.09	0.08	0.06	0.05	0.04	0.03	0.03	0.02	0.02	0.01
28.14	827.19	68.36	45.22	34.58	24.49	17.29	11.76	7.74	5.88	4.03	2.97	2.10	1.47	1.13	0.82	0.60	0.41	0.30	0.24	0.21	0.15	0.12	0.10	0.08	0.06	0.05	0.04	0.03	0.03	0.02	0.02	0.01
25.20	803.16	74.12	49.03	37.50	26.56	18.75	12.75	8.39	6.37	4.37	3.22	2.28	1.59	1.23	0.89	0.65	0.45	0.33	0.27	0.22	0.16	0.13	0.11	0.09	0.07	0.06	0.05	0.04	0.03	0.02	0.02	0.02
21.92	745.50	79.10	52.33	40.02	28.34	20.01	13.61	8.95	6.80	4.66	3.44	2.43	1.70	1.31	0.94	0.69	0.48	0.35	0.28	0.24	0.18	0.14	0.12	0.10	0.07	0.06	0.05	0.04	0.03	0.03	0.02	0.02
19.33	726.28	87.39	57.82	44.21	31.32	22.11	15.03	9.89	7.52	5.15	3.80	2.68	1.88	1.45	1.04	0.77	0.53	0.39	0.31	0.26	0.19	0.16	0.13	0.11	0.08	0.06	0.05	0.04	0.04	0.03	0.02	0.02
17.28	689.90	92.85	61.42	46.97	33.27	23.49	15.97	10.51	7.98	5.47	4.03	2.85	2.00	1.54	1.11	0.81	0.56	0.41	0.33	0.28	0.21	0.17	0.14	0.11	0.08	0.07	0.06	0.05	0.04	0.03	0.02	0.02
15.46	656.26	98.70	65.29	49.93	35.37	24.96	16.98	11.17	8.49	5.81	4.29	3.03	2.12	1.63	1.18	0.87	0.60	0.44	0.35	0.30	0.22	0.18	0.15	0.12	0.09	0.07	0.06	0.05	0.04	0.03	0.03	0.02
13.95	631.55	105.28	69.65	53.26	37.73	26.63	18.11	11.91	9.05	6.20	4.57	3.23	2.26	1.74	1.26	0.92	0.64	0.47	0.38	0.32	0.23	0.19	0.16	0.13	0.09	0.08	0.06	0.05	0.04	0.04	0.03	0.02
12.46	583.50	108.89	72.04	55.09	39.02	27.54	18.73	12.32	9.36	6.41	4.73	3.34	2.34	1.80	1.30	0.96	0.66	0.48	0.39	0.33	0.24	0.20	0.16	0.13	0.10	0.08	0.07	0.06	0.05	0.04	0.03	0.02
11.38	549.17	112.24	74.25	56.78	40.22	28.39	19.31	12.70	9.65	6.61	4.88	3.45	2.41	1.86	1.34	0.98	0.68	0.50	0.40	0.34	0.25	0.20	0.17	0.14	0.10	0.08	0.07	0.06	0.05	0.04	0.03	0.02
10.26	512.10	116.08	76.79	58.72	41.59	29.36	19.96	13.13	9.98	6.84	5.04	3.57	2.50	1.92	1.39	1.02	0.70	0.51	0.42	0.35	0.26	0.21	0.17	0.14	0.10	0.09	0.07	0.06	0.05	0.04	0.03	0.02
9.41	475.72	117.61	77.81	59.50	42.14	29.75	20.23	13.31	10.11	6.93	5.11	3.61	2.53	1.95	1.40	1.03	0.71	0.52	0.42	0.36	0.26	0.21	0.17	0.14	0.10	0.09	0.07	0.06	0.05	0.04	0.03	0.03
8.61	449.63	121.50	80.38	61.46	43.54	30.73	20.90	13.75	10.45	7.16	5.28	3.73	2.61	2.01	1.45	1.07	0.74	0.54	0.44	0.37	0.27	0.22	0.18	0.15	0.11	0.09	0.07	0.06	0.05	0.04	0.03	0.03
8.20	431.83	122.48	81.03	61.96	43.89	30.98	21.07	13.86	10.53	7.21	5.32	3.76	2.63	2.03	1.46	1.07	0.74	0.54	0.44	0.37	0.27	0.22	0.18	0.15	0.11	0.09	0.07	0.06	0.05	0.04	0.03	0.03
7.32	400.21	127.07	84.06	64.28	45.53	32.14	21.86	14.38	10.93	7.49	5.52	3.90	2.73	2.10	1.52	1.12	0.77	0.56	0.46	0.38	0.28	0.23	0.19	0.15	0.11	0.09	0.08	0.06	0.05	0.04	0.03	0.03
6.69	372.06	129.38	85.59	65.45	46.36	32.72	22.25	14.64	11.13	7.62	5.62	3.97	2.78	2.14	1.55	1.14	0.78	0.57	0.46	0.39	0.29	0.23	0.19	0.16	0.12	0.10	0.08	0.07	0.05	0.04	0.03	0.03
6.03	345.98	133.42	88.27	67.50	47.81	33.75	22.95	15.10	11.47	7.86	5.80	4.10	2.87	2.21	1.59	1.17	0.81	0.59	0.48	0.40	0.30	0.24	0.20	0.16	0.12	0.10	0.08	0.07	0.06	0.04	0.04	0.03
5.53	329.50	138.60	91.69	70.11	49.66	35.06	23.84	15.68	11.92	8.16	6.02	4.26	2.98	2.29	1.66	1.22	0.84	0.61	0.50	0.42	0.31	0.25	0.21	0.17	0.12	0.10	0.08	0.07	0.06	0.05	0.04	0.03
5.06	308.22	141.70	93.74	71.68	50.78	35.84	24.37	16.03	12.19	8.35	6.15	4.35	3.05	2.34	1.69	1.24	0.86	0.63	0.51	0.43	0.31	0.26	0.21	0.17	0.13	0.11	0.09	0.07	0.06	0.05	0.04	0.03
4.68	196.33	97.62	64.58	49.39	34.98	24.69	16.79	11.05	8.40	5.75	4.24	3.00	2.10	1.61	1.17	0.86	0.59	0.43	0.35	0.30	0.22	0.18	0.15	0.12	0.09	0.07	0.06	0.05	0.04	0.03	0.03	0.02
4.19	186.72	103.75	68.64	52.49	37.18	26.24	17.85	11.74	8.92	6.11	4.51	3.19	2.23	1.72	1.24	0.91	0.63	0.46	0.37	0.31	0.23	0.19	0.15	0.13	0.09	0.08	0.06	0.05	0.04	0.03	0.03	0.02
3.78	186.03	114.58	75.80	57.97	41.06	28.98	19.71	12.97	9.85	6.75	4.98	3.52	2.46	1.90	1.37	1.01	0.69	0.51	0.41	0.35	0.25	0.21	0.17	0.14	0.10	0.09	0.07	0.06	0.05	0.04	0.03	0.02
3.37	183.29	126.38	83.61	63.93	45.29	31.97	21.74	14.30	10.87	7.44	5.49	3.88	2.72	2.09	1.51	1.11	0.77	0.56	0.45	0.38	0.28	0.23	0.19	0.15	0.11	0.09	0.08	0.06	0.05	0.04	0.03	0.03
3.08	181.23	136.85	90.53	69.23	49.04	34.62	23.54	15.49	11.77	8.06	5.94	4.20	2.94	2.26	1.63	1.20	0.83	0.61	0.49	0.41	0.30	0.25	0.20	0.17	0.12	0.10	0.08	0.07	0.06	0.05	0.04	0.03
2.78	175.39	146.88	97.17	74.31	52.63	37.15	25.26	16.62	12.63	8.65	6.38	4.51	3.16	2.43	1.75	1.29	0.89	0.65	0.53	0.44	0.33	0.27	0.22	0.18	0.13	0.11	0.09	0.07	0.06	0.05	0.04	0.03
2.55	166.12	151.74	100.38	76.76	54.37	38.38	26.10	17.17	13.05	8.94	6.59	4.66	3.26	2.51	1.81	1.33	0.92	0.67	0.54	0.46	0.34	0.27	0.23	0.18	0.14	0.11	0.09	0.08	0.06	0.05	0.04	0.03
2.33	151.71	151.47	100.20	76.62	54.28	38.31	26.05	17.14	13.03	8.92	6.58	4.65	3.26	2.51	1.81	1.33	0.92	0.67	0.54	0.46	0.34	0.27	0.23	0.18	0.14	0.11	0.09	0.08	0.06	0.05	0.04	0.03

	kW	0.06	0.09	0.12	0.18	0.25	0.37	0.55	0.75	1.10	1.50	2.20	3.00	4.00	5.50	7.50	11.00	15.00	18.50	22.00	30.00	37.00	45.00	55.00	75.00	90.00	110.00	132.00	160.00	200.00	250.00	315.00
RATIO	NM	0.43	0.65	0.85	1.20	1.70	2.50	3.80	5.00	7.30	9.90	14.00	20.00	26.00	36.00	49.00	71.00	97.00	120.00	142.00	194.00	238.00	289.00	354.00	482.00	579.00	707.00	849.00	1029.00	1286.00	1602.00	2019.00
117.60	1784.81	35.30	23.35	17.86	12.65	8.93	6.07	3.99	3.04	2.08	1.53	1.08	0.76	0.58	0.42	0.31	0.21	0.16	0.13	0.11	0.08	0.06	0.05	0.04	0.03	0.03	0.02	0.02	0.01	0.01	0.01	0.01
102.28	1709.30	38.86	25.71	19.66	13.93	9.83	6.68	4.40	3.34	2.29	1.69	1.19	0.84	0.64	0.46	0.34	0.24	0.17	0.14	0.12	0.09	0.07	0.06	0.05	0.03	0.03	0.02	0.02	0.02	0.01	0.01	0.01
90.19	1681.84	43.37	28.69	21.94	15.54	10.97	7.46	4.91	3.73	2.55	1.88	1.33	0.93	0.72	0.52	0.38	0.26	0.19	0.16	0.13	0.10	0.08	0.06	0.05	0.04	0.03	0.03	0.02	0.02	0.01	0.01	0.01
80.64	1640.65	47.31	31.30	23.94	16.95	11.97	8.14	5.35	4.07	2.79	2.06	1.45	1.02	0.78	0.57	0.42	0.29	0.21	0.17	0.14	0.10	0.09	0.07	0.06	0.04	0.04	0.03	0.02	0.02	0.02	0.01	0.01
72.16	1558.28	50.22	33.22	25.40	17.99	12.70	8.64	5.68	4.32	2.96	2.18	1.54	1.08	0.83	0.60	0.44	0.30	0.22	0.18	0.15	0.11	0.09	0.07	0.06	0.04	0.04	0.03	0.03	0.02	0.02	0.01	0.01
65.10	1544.55	55.18	36.50	27.91	19.77	13.96	9.49	6.24	4.75	3.25	2.40	1.69	1.19	0.91	0.66	0.48	0.33	0.24	0.20	0.17	0.12	0.10	0.08	0.07	0.05	0.04	0.03	0.03	0.02	0.02	0.01	0.01
58.15	1517.09	60.67	40.13	30.69	21.74	15.35	10.44	6.87	5.22	3.57	2.64	1.86	1.30	1.00	0.72	0.53	0.37	0.27	0.22	0.18	0.13	0.11	0.09	0.07	0.05	0.05	0.04	0.03	0.03	0.02	0.02	0.01
53.10	1469.04	64.34	42.56	32.55	23.05	16.27	11.07	7.28	5.53	3.79	2.79	1.98	1.38	1.06	0.77	0.56	0.39	0.29	0.23	0.19	0.14	0.12	0.10	0.08	0.06	0.05	0.04	0.03	0.03	0.02	0.02	0.01
47.88	1407.25	68.35	45.22	34.58	24.49	17.29	11.76	7.73	5.88	4.03	2.97	2.10	1.47	1.13	0.82	0.60	0.41	0.30	0.24	0.21	0.15	0.12	0.10	0.08	0.06	0.05	0.04	0.03	0.03	0.02	0.02	0.01
43.90	1359.20	72.01	47.64	36.43	25.80	18.21	12.39	8.15	6.19	4.24	3.13	2.21	1.55	1.19	0.86	0.63	0.44	0.32	0.26	0.22	0.16	0.13	0.11	0.09	0.06	0.05	0.04	0.04	0.03	0.02	0.02	0.02
40.16	1318.01	76.32	50.49	38.61	27.35	19.30	13.13	8.64	6.56	4.50	3.31	2.34	1.64	1.26	0.91	0.67	0.46	0.34	0.27	0.23	0.17	0.14	0.11	0.09	0.07	0.06	0.05	0.04	0.03	0.03	0.02	0.02
34.18	1242.50	84.54	55.92	42.77	30.29	21.38	14.54	9.57	7.27	4.98	3.67	2.60	1.82	1.40	1.01	0.74	0.51	0.37	0.30	0.26	0.19	0.15	0.13	0.10	0.08	0.06	0.05	0.04	0.04	0.03	0.02	0.02
31.21	1180.72	87.98	58.20	44.51	31.53	22.25	15.13	9.96	7.57	5.18	3.82	2.70	1.89	1.46	1.05	0.77	0.53	0.39	0.32	0.27	0.20	0.16	0.13	0.11	0.08	0.07	0.05	0.04	0.04	0.03	0.02	0.02
28.14	1156.69	95.59	63.23	48.36	34.25	24.18	16.44	10.82	8.22	5.63	4.15	2.94	2.06	1.58	1.14	0.84	0.58	0.42	0.34	0.29	0.21	0.17	0.14	0.12	0.09	0.07	0.06	0.05	0.04	0.03	0.03	0.02
25.20	1120.31	103.39	68.40	52.30	37.05	26.15	17.78	11.70	8.89	6.09	4.49	3.18	2.22	1.71	1.23	0.91	0.63	0.46	0.37	0.31	0.23	0.19	0.15	0.13	0.09	0.08	0.06	0.05	0.04	0.03	0.03	0.02
21.92	1072.26	113.77	75.26	57.56	40.77	28.78	19.57	12.87	9.78	6.70	4.94	3.49	2.45	1.88	1.36	1.00	0.69	0.50	0.41	0.34	0.25	0.21	0.17	0.14	0.10	0.08	0.07	0.06	0.05	0.04	0.03	0.02
19.33	1036.56	124.73	82.52	63.10	44.70	31.55	21.45	14.11	10.73	7.35	5.42	3.83	2.68	2.06	1.49	1.09	0.76	0.55	0.45	0.38	0.28	0.23	0.19	0.15	0.11	0.09	0.08	0.06	0.05	0.04	0.03	0.03
17.28	1015.97	136.73	90.45	69.17	49.00	34.58	23.52	15.47	11.76	8.05	5.94	4.20	2.94	2.26	1.63	1.20	0.83	0.61	0.49	0.41	0.30	0.25	0.20	0.17	0.12	0.10	0.08	0.07	0.06	0.05	0.04	0.03
15.46	996.75	149.90	99.17	75.83	53.71	37.92	25.78	16.96	12.89	8.83	6.51	4.60	3.22	2.48	1.79	1.32	0.91	0.66	0.54	0.45	0.33	0.27	0.22	0.18	0.13	0.11	0.09	0.08	0.06	0.05	0.04	0.03
13.95	967.92	161.36	106.75	81.63	57.82	40.81	27.75	18.26	13.88	9.50	7.01	4.96	3.47	2.67	1.93	1.42	0.98	0.72	0.58	0.49	0.36	0.29	0.24	0.20	0.14	0.12	0.10	0.08	0.07	0.05	0.04	0.03
12.46	918.49	171.41	113.39	86.71	61.42	43.36	29.48	19.40	14.74	10.10	7.45	5.26	3.69	2.83	2.05	1.50	1.04	0.76	0.61	0.52	0.38	0.31	0.26	0.21	0.15	0.13	0.10	0.09	0.07	0.06	0.05	0.04
11.38	856.02	174.96	115.74	88.51	62.69	44.25	30.09	19.80	15.05	10.31	7.60	5.37	3.76	2.89	2.09	1.54	1.06	0.78	0.63	0.53	0.39	0.32	0.26	0.21	0.16	0.13	0.11	0.09	0.07	0.06	0.05	0.04
10.26	810.03	183.61	121.46	92.88	65.79	46.44	31.58	20.78	15.79	10.82	7.97	5.64	3.95	3.04	2.19	1.61	1.11	0.81	0.66	0.56	0.41	0.33	0.27	0.22	0.16	0.14	0.11	0.09	0.08	0.06	0.05	0.04
9.41	761.98	188.39	124.62	95.30	67.50	47.65	32.40	21.32	16.20	11.10	8.18	5.79	4.05	3.12	2.25	1.65	1.14	0.84	0.68	0.57	0.42	0.34	0.28	0.23	0.17	0.14	0.11	0.10	0.08	0.06	0.05	0.04
8.61	717.36	193.84	128.24	98.06	69.46	49.03	33.34	21.93	16.67	11.42	8.42	5.95	4.17	3.21	2.32	1.70	1.17	0.86	0.69	0.59	0.43	0.35	0.29	0.24	0.17	0.14	0.12	0.10	0.08	0.06	0.05	0.04
8.20	695.39	197.24	130.48	99.78	70.68	49.89	33.92	22.32	16.96	11.62	8.57	6.06	4.24	3.26	2.36	1.73	1.19	0.87	0.71	0.60	0.44	0.36	0.29	0.24	0.18	0.15	0.12	0.10	0.08	0.07	0.05	0.04
7.32	653.52	207.50	137.27	104.97	74.35	52.48	35.69	23.48	17.84	12.22	9.01	6.37	4.46	3.43	2.48	1.82	1.26	0.92	0.74	0.63	0.46	0.37	0.31	0.25	0.19	0.15	0.13	0.11	0.09	0.07	0.06	0.04
6.69	610.95	212.45	140.54	107.47	76.13	53.74	36.54	24.04	18.27	12.51	9.23	6.53	4.57	3.51	2.54	1.86	1.29	0.94	0.76	0.64	0.47	0.38	0.32	0.26	0.19	0.16	0.13	0.11	0.09	0.07	0.06	0.05
6.03	578.69	223.17	147.63	112.90	79.97	56.45	38.38	25.25	19.19	13.15	9.69	6.85	4.80	3.69	2.67	1.96	1.35	0.99	0.80	0.68	0.49	0.40	0.33	0.27	0.20	0.17	0.14	0.11	0.09	0.07	0.06	0.05
5.53	550.55	231.58	153.20	117.15	82.98	58.58	39.83	26.20	19.92	13.64	10.06	7.11	4.98	3.83	2.77	2.03	1.40	1.03	0.83	0.70	0.51	0.42	0.34	0.28	0.21	0.17	0.14	0.12	0.10	0.08	0.06	0.05
5.06	520.34	239.22	158.26	121.02	85.72	60.51	41.15	27.07	20.57	14.09	10.39	7.35	5.14	3.96	2.86	2.10	1.45	1.06	0.86	0.72	0.53	0.43	0.36	0.29	0.21	0.18	0.15	0.12	0.10	0.08	0.06	0.05
4.68	499.75	248.50	164.39	125.71	89.04	62.86	42.74	28.12	21.37	14.64	10.79	7.63	5.34	4.11	2.97	2.18	1.50	1.10	0.89	0.75	0.55	0.45	0.37	0.30	0.22	0.18	0.15	0.13	0.10	0.08	0.07	0.05
4.19	461.30	256.33	169.57	129.67	91.85	64.84	44.09	29.01	22.04	15.10	11.13	7.87	5.51	4.24	3.06	2.25	1.55	1.14	0.92	0.78	0.57	0.46	0.38	0.31	0.23	0.19	0.16	0.13	0.11	0.09	0.07	0.05
3.78	436.59	268.92	177.90	136.04	96.36	68.02	46.25	30.43	23.13	15.84	11.68	8.26	5.78	4.45	3.21	2.36	1.63	1.19	0.96	0.81	0.60	0.49	0.40	0.33	0.24	0.20	0.16	0.14	0.11	0.09	0.07	0.06
3.37	408.45	281.63	186.31	142.47	100.92	71.24	48.44	31.87	24.22	16.59	12.23	8.65	6.06	4.66	3.36	2.47	1.71	1.25	1.01	0.85	0.62	0.51	0.42	0.34	0.25	0.21	0.17	0.14	0.12	0.09	0.08	0.06
3.08	384.42	290.29	192.04	146.85	104.02	73.43	49.93	32.85	24.97	17.10	12.61	8.92	6.24	4.80	3.47	2.55	1.76	1.29	1.04	0.88	0.64	0.52	0.43	0.35	0.26	0.22	0.18	0.15	0.12	0.10	0.08	0.06
2.78	351.47	294.34	194.72	148.90	105.47	74.45	50.63	33.31	25.31	17.34	12.78	9.04	6.33	4.87	3.52	2.58	1.78	1.30	1.05	0.89	0.65	0.53	0.44	0.36	0.26	0.22	0.18	0.15	0.12	0.10	0.08	0.06
2.55	326.76	298.48	197.46	151.00	106.96	75.50	51.34	33.78	25.67	17.58	12.96	9.17	6.42	4.94	3.57	2.62	1.81	1.32	1.07	0.90	0.66	0.54	0.44	0.36	0.27	0.22	0.18	0.15	0.12	0.10	0.08	0.06
2.33	303.42	302.93	200.40	153.25	108.55	76.62	52.10	34.28	26.05	17.84	13.16	9.30	6.51	5.01	3.62	2.66	1.83	1.34	1.09	0.92	0.67	0.55	0.45	0.37	0.27	0.22	0.18	0.15	0.13	0.10	0.08	0.06

	kW	0.06	0.09	0.12	0.18	0.25	0.37	0.55	0.75	1.10	1.50	2.20	3.00	4.00	5.50	7.50	11.00	15.00	18.50	22.00	30.00	37.00	45.00	55.00	75.00	90.00	110.00	132.00	160.00	200.00	250.00	315.00
RATIO	NM	0.43	0.65	0.85	1.20	1.70	2.50	3.80	5.00	7.30	9.90	14.00	20.00	26.00	36.00	49.00	71.00	97.00	120.00	142.00	194.00	238.00	289.00	354.00	482.00	579.00	707.00	849.00	1029.00	1286.00	1602.00	2019.00
83.56	2141.77	59.61	39.43	30.16	21.36	15.08	10.25	6.75	5.13	3.51	2.59	1.83	1.28	0.99	0.71	0.52	0.36	0.26	0.21	0.18	0.13	0.11	0.09	0.07	0.05	0.04	0.04	0.03	0.02	0.02	0.02	0.01
72.67	2114.31	67.66	44.76	34.23	24.24	17.11	11.64	7.66	5.82	3.99	2.94	2.08	1.45	1.12	0.81	0.59	0.41	0.30	0.24	0.20	0.15	0.12	0.10	0.08	0.06	0.05	0.04	0.03	0.03	0.02	0.02	0.01
65.79	2491.87	88.08	58.27	44.56	31.56	22.28	15.15	9.97	7.57	5.19	3.83	2.71	1.89	1.46	1.05	0.77	0.53	0.39	0.32	0.27	0.20	0.16	0.13	0.11	0.08	0.07	0.05	0.04	0.04	0.03	0.02	0.02
57.22	2450.68	99.60	65.89	50.38	35.69	25.19	17.13	11.27	8.57	5.87	4.33	3.06	2.14	1.65	1.19	0.87	0.60	0.44	0.36	0.30	0.22	0.18	0.15	0.12	0.09	0.07	0.06	0.05	0.04	0.03	0.03	0.02
50.46	2443.82	112.63	74.51	56.98	40.36	28.49	19.37	12.75	9.69	6.63	4.89	3.46	2.42	1.86	1.35	0.99	0.68	0.50	0.40	0.34	0.25	0.20	0.17	0.14	0.10	0.08	0.07	0.06	0.05	0.04	0.03	0.02
45.12	2412.93	124.38	82.28	62.92	44.57	31.46	21.39	14.07	10.70	7.33	5.40	3.82	2.67	2.06	1.49	1.09	0.75	0.55	0.45	0.38	0.28	0.22	0.19	0.15	0.11	0.09	0.08	0.06	0.05	0.04	0.03	0.03
40.37	2402.63	138.40	91.55	70.01	49.59	35.01	23.80	15.66	11.90	8.15	6.01	4.25	2.98	2.29	1.65	1.21	0.84	0.61	0.50	0.42	0.31	0.25	0.21	0.17	0.12	0.10	0.08	0.07	0.06	0.05	0.04	0.03
36.42	2299.66	146.84	97.14	74.28	52.62	37.14	25.26	16.62	12.63	8.65	6.38	4.51	3.16	2.43	1.75	1.29	0.89	0.65	0.53	0.44	0.33	0.27	0.22	0.18	0.13	0.11	0.09	0.07	0.06	0.05	0.04	0.03
32.54	2265.34	161.92	107.12	81.91	58.02	40.96	27.85	18.32	13.93	9.54	7.03	4.97	3.48	2.68	1.93	1.42	0.98	0.72	0.58	0.49	0.36	0.29	0.24	0.20	0.14	0.12	0.10	0.08	0.07	0.05	0.04	0.03
29.71	2231.01	174.65	115.54	88.35	62.58	44.18	30.04	19.76	15.02	10.29	7.59	5.36	3.75	2.89	2.09	1.53	1.06	0.77	0.63	0.53	0.39	0.32	0.26	0.21	0.16	0.13	0.11	0.09	0.07	0.06	0.05	0.04
26.79	2169.23	188.33	124.58	95.27	67.48	47.64	32.39	21.31	16.20	11.09	8.18	5.78	4.05	3.11	2.25	1.65	1.14	0.83	0.67	0.57	0.42	0.34	0.28	0.23	0.17	0.14	0.11	0.10	0.08	0.06	0.05	0.04
24.56	2146.58	203.27	134.47	102.83	72.84	51.42	34.96	23.00	17.48	11.97	8.83	6.24	4.37	3.36	2.43	1.78	1.23	0.90	0.73	0.62	0.45	0.37	0.30	0.25	0.18	0.15	0.12	0.10	0.08	0.07	0.05	0.04
22.47	2136.28	221.10	146.27	111.85	79.23	55.93	38.03	25.02	19.01	13.02	9.60	6.79	4.75	3.66	2.64	1.94	1.34	0.98	0.79	0.67	0.49	0.40	0.33	0.27	0.20	0.16	0.13	0.11	0.09	0.07	0.06	0.05
19.90	1926.91	225.14	148.94	113.90	80.68	56.95	38.72	25.48	19.36	13.26	9.78	6.92	4.84	3.72	2.69	1.98	1.36	1.00	0.81	0.68	0.50	0.41	0.33	0.27	0.20	0.17	0.14	0.11	0.09	0.08	0.06	0.05
18.17	1851.40	236.91	156.72	119.85	84.89	59.92	40.75	26.81	20.37	13.95	10.29	7.28	5.09	3.92	2.83	2.08	1.43	1.05	0.85	0.72	0.53	0.43	0.35	0.29	0.21	0.18	0.14	0.12	0.10	0.08	0.06	0.05
16.39	1747.05	247.93	164.01	125.42	88.84	62.71	42.64	28.05	21.32	14.60	10.77	7.61	5.33	4.10	2.96	2.18	1.50	1.10	0.89	0.75	0.55	0.45	0.37	0.30	0.22	0.18	0.15	0.13	0.10	0.08	0.07	0.05
15.02	1679.78	260.01	172.01	131.54	93.17	65.77	44.72	29.42	22.36	15.32	11.29	7.99	5.59	4.30	3.11	2.28	1.57	1.15	0.93	0.79	0.58	0.47	0.39	0.32	0.23	0.19	0.16	0.13	0.11	0.09	0.07	0.06
13.75	1626.92	275.24	182.09	139.24	98.63	69.62	47.34	31.15	23.67	16.21	11.96	8.45	5.92	4.55	3.29	2.42	1.67	1.22	0.99	0.83	0.61	0.50	0.41	0.33	0.25	0.20	0.17	0.14	0.12	0.09	0.07	0.06
12.06	1520.52	293.15	193.93	148.30	105.05	74.15	50.42	33.17	25.21	17.27	12.73	9.00	6.30	4.85	3.50	2.57	1.78	1.30	1.05	0.89	0.65	0.53	0.44	0.36	0.26	0.22	0.18	0.15	0.12	0.10	0.08	0.06
10.79	1462.17	315.28	208.57	159.50	112.98	79.75	54.23	35.68	27.11	18.57	13.69	9.68	6.78	5.21	3.77	2.77	1.91	1.40	1.13	0.95	0.70	0.57	0.47	0.38	0.28	0.23	0.19	0.16	0.13	0.11	0.08	0.07
9.65	1367.44	329.49	217.97	166.68	118.07	83.34	56.67	37.28	28.34	19.41	14.31	10.12	7.08	5.45	3.94	2.89	2.00	1.46	1.18	1.00	0.73	0.60	0.49	0.40	0.29	0.24	0.20	0.17	0.14	0.11	0.09	0.07
8.71	1281.63	342.32	226.46	173.18	122.67	86.59	58.88	38.74	29.44	20.16	14.87	10.51	7.36	5.66	4.09	3.00	2.07	1.52	1.23	1.04	0.76	0.62	0.51	0.42	0.31	0.25	0.21	0.17	0.14	0.11	0.09	0.07
7.78	1216.42	363.71	240.61	184.00	130.33	92.00	62.56	41.16	31.28	21.42	15.80	11.17	7.82	6.02	4.34	3.19	2.20	1.61	1.30	1.10	0.81	0.66	0.54	0.44	0.32	0.27	0.22	0.18	0.15	0.12	0.10	0.08
6.86	1137.47	385.85	255.25	195.19	138.26	97.60	66.37	43.66	33.18	22.73	16.76	11.85	8.30	6.38	4.61	3.39	2.34	1.71	1.38	1.17	0.86	0.70	0.57	0.47	0.34	0.29	0.23	0.20	0.16	0.13	0.10	0.08
6.40	1103.15	400.62	265.03	202.67	143.56	101.33	68.91	45.33	34.45	23.60	17.40	12.30	8.61	6.63	4.79	3.52	2.43	1.78	1.44	1.21	0.89	0.72	0.60	0.49	0.36	0.30	0.24	0.20	0.17	0.13	0.11	0.09
5.59	1037.94	431.65	285.55	218.36	154.67	109.18	74.24	48.84	37.12	25.43	18.75	13.26	9.28	7.14	5.16	3.79	2.61	1.91	1.55	1.31	0.96	0.78	0.64	0.52	0.39	0.32	0.26	0.22	0.18	0.14	0.12	0.09
5.29	988.51	434.29	287.30	219.70	155.62	109.85	74.70	49.14	37.35	25.58	18.86	13.34	9.34	7.18	5.19	3.81	2.63	1.93	1.56	1.32	0.96	0.78	0.65	0.53	0.39	0.32	0.26	0.22	0.18	0.15	0.12	0.09
4.78	941.83	458.68	303.43	232.04	164.36	116.02	78.89	51.90	39.45	27.02	19.92	14.09	9.86	7.59	5.48	4.03	2.78	2.03	1.64	1.39	1.02	0.83	0.68	0.56	0.41	0.34	0.28	0.23	0.19	0.15	0.12	0.10
4.23	839.55	461.62	305.38	233.52	165.41	116.76	79.40	52.24	39.70	27.19	20.05	14.18	9.92	7.63	5.51	4.05	2.80	2.05	1.65	1.40	1.02	0.83	0.69	0.56	0.41	0.34	0.28	0.23	0.19	0.15	0.12	0.10
3.90	784.63	468.48	309.91	236.99	167.87	118.50	80.58	53.01	40.29	27.60	20.35	14.39	10.07	7.75	5.60	4.11	2.84	2.08	1.68	1.42	1.04	0.85	0.70	0.57	0.42	0.35	0.28	0.24	0.20	0.16	0.13	0.10
3.51	726.28	480.91	318.14	243.29	172.33	121.64	82.72	54.42	41.36	28.33	20.89	14.77	10.34	7.95	5.74	4.22	2.91	2.13	1.72	1.46	1.07	0.87	0.72	0.58	0.43	0.36	0.29	0.24	0.20	0.16	0.13	0.10
3.12	699.51	520.66	344.43	263.39	186.57	131.70	89.55	58.92	44.78	30.67	22.61	15.99	11.19	8.61	6.22	4.57	3.15	2.31	1.87	1.58	1.15	0.94	0.77	0.63	0.46	0.39	0.32	0.26	0.22	0.17	0.14	0.11
2.95	659.69	520.76	344.50	263.44	186.61	131.72	89.57	58.93	44.79	30.67	22.62	15.99	11.20	8.61	6.22	4.57	3.15	2.31	1.87	1.58	1.15	0.94	0.77	0.63	0.46	0.39	0.32	0.26	0.22	0.17	0.14	0.11
2.62	598.60	531.16	351.38	268.71	190.33	134.35	91.36	60.11	45.68	31.29	23.07	16.31	11.42	8.78	6.34	4.66	3.22	2.35	1.90	1.61	1.18	0.96	0.79	0.65	0.47	0.39	0.32	0.27	0.22	0.18	0.14	0.11
2.31	565.65	569.19	376.54	287.94	203.96	143.97	97.90	64.41	48.95	33.53	24.72	17.48	12.24	9.41	6.80	4.99	3.45	2.52	2.04	1.72	1.26	1.03	0.85	0.69	0.51	0.42	0.35	0.29	0.24	0.19	0.15	0.12

	kW	0.06	0.09	0.12	0.18	0.25	0.37	0.55	0.75	1.10	1.50	2.20	3.00	4.00	5.50	7.50	11.00	15.00	18.50	22.00	30.00	37.00	45.00	55.00	75.00	90.00	110.00	132.00	160.00	200.00	250.00	315.00
RATIO	NM	0.43	0.65	0.85	1.20	1.70	2.50	3.80	5.00	7.30	9.90	14.00	20.00	26.00	36.00	49.00	71.00	97.00	120.00	142.00	194.00	238.00	289.00	354.00	482.00	579.00	707.00	849.00	1029.00	1286.00	1602.00	2019.00
118.31	3857.94	75.83	50.17	38.36	27.17	19.18	13.04	8.58	6.52	4.47	3.29	2.33	1.63	1.25	0.91	0.67	0.46	0.34	0.27	0.23	0.17	0.14	0.11	0.09	0.07	0.06	0.05	0.04	0.03	0.03	0.02	0.02
104.22	3789.29	84.56	55.94	42.78	30.30	21.39	14.54	9.57	7.27	4.98	3.67	2.60	1.82	1.40	1.01	0.74	0.51	0.37	0.30	0.26	0.19	0.15	0.13	0.10	0.08	0.06	0.05	0.04	0.04	0.03	0.02	0.02
90.79	3700.05	94.78	62.70	47.95	33.96	23.97	16.30	10.72	8.15	5.58	4.12	2.91	2.04	1.57	1.13	0.83	0.57	0.42	0.34	0.29	0.21	0.17	0.14	0.12	0.08	0.07	0.06	0.05	0.04	0.03	0.03	0.02
81.06	3590.21	103.00	68.14	52.11	36.91	26.05	17.72	11.66	8.86	6.07	4.47	3.16	2.21	1.70	1.23	0.90	0.62	0.46	0.37	0.31	0.23	0.19	0.15	0.13	0.09	0.08	0.06	0.05	0.04	0.03	0.03	0.02
73.03	3528.43	112.37	74.33	56.84	40.26	28.42	19.33	12.72	9.66	6.62	4.88	3.45	2.42	1.86	1.34	0.99	0.68	0.50	0.40	0.34	0.25	0.20	0.17	0.14	0.10	0.08	0.07	0.06	0.05	0.04	0.03	0.02
66.28	3500.97	122.85	81.27	62.15	44.02	31.07	21.13	13.90	10.56	7.24	5.34	3.77	2.64	2.03	1.47	1.08	0.74	0.54	0.44	0.37	0.27	0.22	0.18	0.15	0.11	0.09	0.07	0.06	0.05	0.04	0.03	0.03
58.36	3452.92	137.58	91.02	69.60	49.30	34.80	23.66	15.57	11.83	8.10	5.98	4.23	2.96	2.28	1.64	1.21	0.83	0.61	0.49	0.42	0.30	0.25	0.20	0.17	0.12	0.10	0.08	0.07	0.06	0.05	0.04	0.03
54.00	3432.33	147.81	97.78	74.77	52.96	37.39	25.42	16.73	12.71	8.71	6.42	4.54	3.18	2.44	1.77	1.30	0.90	0.66	0.53	0.45	0.33	0.27	0.22	0.18	0.13	0.11	0.09	0.07	0.06	0.05	0.04	0.03
48.42	3384.27	162.54	107.53	82.23	58.24	41.11	27.96	18.39	13.98	9.57	7.06	4.99	3.49	2.69	1.94	1.43	0.98	0.72	0.58	0.49	0.36	0.29	0.24	0.20	0.15	0.12	0.10	0.08	0.07	0.05	0.04	0.03
45.39	3356.82	171.97	113.76	87.00	61.62	43.50	29.58	19.46	14.79	10.13	7.47	5.28	3.70	2.84	2.05	1.51	1.04	0.76	0.62	0.52	0.38	0.31	0.26	0.21	0.15	0.13	0.10	0.09	0.07	0.06	0.05	0.04
41.14	3253.85	183.94	121.68	93.05	65.91	46.53	31.64	20.81	15.82	10.83	7.99	5.65	3.95	3.04	2.20	1.61	1.11	0.82	0.66	0.56	0.41	0.33	0.27	0.22	0.16	0.14	0.11	0.09	0.08	0.06	0.05	0.04
34.92	3157.74	210.30	139.12	106.39	75.36	53.19	36.17	23.80	18.09	12.39	9.13	6.46	4.52	3.48	2.51	1.85	1.27	0.93	0.75	0.64	0.47	0.38	0.31	0.26	0.19	0.16	0.13	0.11	0.09	0.07	0.06	0.04
31.78	3137.15	229.59	151.89	116.15	82.27	58.07	39.49	25.98	19.75	13.52	9.97	7.05	4.94	3.80	2.74	2.01	1.39	1.02	0.82	0.70	0.51	0.41	0.34	0.28	0.20	0.17	0.14	0.12	0.10	0.08	0.06	0.05
28.79	3109.69	251.22	166.19	127.09	90.02	63.54	43.21	28.43	21.60	14.80	10.91	7.72	5.40	4.15	3.00	2.20	1.52	1.11	0.90	0.76	0.56	0.45	0.37	0.31	0.22	0.19	0.15	0.13	0.10	0.08	0.07	0.05
25.10	3095.96	286.80	189.73	145.09	102.77	72.54	49.33	32.45	24.66	16.89	12.46	8.81	6.17	4.74	3.43	2.52	1.74	1.27	1.03	0.87	0.64	0.52	0.43	0.35	0.26	0.21	0.17	0.15	0.12	0.10	0.08	0.06
22.53	2938.07	303.22	200.59	153.39	108.65	76.70	52.15	34.31	26.08	17.86	13.17	9.31	6.52	5.01	3.62	2.66	1.84	1.34	1.09	0.92	0.67	0.55	0.45	0.37	0.27	0.23	0.18	0.15	0.13	0.10	0.08	0.06
18.88	2787.05	343.34	227.14	173.69	123.03	86.85	59.06	38.85	29.53	20.22	14.91	10.55	7.38	5.68	4.10	3.01	2.08	1.52	1.23	1.04	0.76	0.62	0.51	0.42	0.31	0.25	0.21	0.17	0.14	0.11	0.09	0.07
17.54	2739.00	363.18	240.26	183.73	130.14	91.86	62.47	41.10	31.23	21.39	15.77	11.15	7.81	6.01	4.34	3.19	2.20	1.61	1.30	1.10	0.80	0.66	0.54	0.44	0.32	0.27	0.22	0.18	0.15	0.12	0.10	0.08
15.64	2642.89	393.06	260.03	198.84	140.85	99.42	67.61	44.48	33.80	23.15	17.07	12.07	8.45	6.50	4.69	3.45	2.38	1.74	1.41	1.19	0.87	0.71	0.58	0.48	0.35	0.29	0.24	0.20	0.16	0.13	0.11	0.08
14.23	2498.73	408.34	270.13	206.57	146.32	103.29	70.23	46.21	35.12	24.05	17.74	12.54	8.78	6.75	4.88	3.58	2.47	1.81	1.46	1.24	0.91	0.74	0.61	0.50	0.36	0.30	0.25	0.21	0.17	0.14	0.11	0.09
13.12	2402.63	425.99	281.81	215.50	152.65	107.75	73.27	48.20	36.64	25.09	18.50	13.08	9.16	7.05	5.09	3.74	2.58	1.89	1.53	1.29	0.94	0.77	0.63	0.52	0.38	0.32	0.26	0.22	0.18	0.14	0.11	0.09
11.28	2237.88	461.54	305.32	233.48	165.38	116.74	79.38	52.23	39.69	27.19	20.05	14.18	9.92	7.63	5.51	4.05	2.80	2.05	1.65	1.40	1.02	0.83	0.69	0.56	0.41	0.34	0.28	0.23	0.19	0.15	0.12	0.10
10.57	2169.23	477.20	315.69	241.41	171.00	120.70	82.08	54.00	41.04	28.11	20.73	14.66	10.26	7.89	5.70	4.19	2.89	2.12	1.71	1.45	1.06	0.86	0.71	0.58	0.43	0.35	0.29	0.24	0.20	0.16	0.13	0.10
9.58	2073.13	503.24	332.91	254.58	180.33	127.29	86.56	56.95	43.28	29.64	21.86	15.46	10.82	8.32	6.01	4.42	3.05	2.23	1.80	1.52	1.12	0.91	0.75	0.61	0.45	0.37	0.31	0.25	0.21	0.17	0.14	0.11
8.96	1997.61	518.70	343.14	262.40	185.87	131.20	89.22	58.69	44.61	30.55	22.53	15.93	11.15	8.58	6.20	4.55	3.14	2.30	1.86	1.57	1.15	0.94	0.77	0.63	0.46	0.39	0.32	0.26	0.22	0.17	0.14	0.11
7.96	1901.51	555.60	367.55	281.07	199.09	140.53	95.56	62.87	47.78	32.73	24.13	17.06	11.95	9.19	6.64	4.88	3.36	2.46	1.99	1.68	1.23	1.00	0.83	0.67	0.50	0.41	0.34	0.28	0.23	0.19	0.15	0.12
7.36	1819.13	574.45	380.02	290.60	205.84	145.30	98.81	65.00	49.40	33.84	24.95	17.64	12.35	9.50	6.86	5.04	3.48	2.55	2.06	1.74	1.27	1.04	0.85	0.70	0.51	0.43	0.35	0.29	0.24	0.19	0.15	0.12
6.60	1695.57	597.17	395.05	302.10	213.98	151.05	102.71	67.57	51.36	35.18	25.94	18.34	12.84	9.88	7.13	5.24	3.62	2.65	2.14	1.81	1.32	1.08	0.89	0.73	0.53	0.44	0.36	0.30	0.25	0.20	0.16	0.13
6.19	1668.11	626.66	414.56	317.02	224.55	158.51	107.79	70.91	53.89	36.91	27.22	19.25	13.47	10.36	7.49	5.50	3.80	2.78	2.25	1.90	1.39	1.13	0.93	0.76	0.56	0.47	0.38	0.32	0.26	0.21	0.17	0.13
5.61	1565.14	648.80	429.21	328.22	232.49	164.11	111.59	73.42	55.80	38.22	28.18	19.93	13.95	10.73	7.75	5.69	3.93	2.88	2.32	1.96	1.44	1.17	0.97	0.79	0.58	0.48	0.39	0.33	0.27	0.22	0.17	0.14
5.04	1462.17	674.57	446.26	341.25	241.72	170.63	116.03	76.33	58.01	39.74	29.30	20.72	14.50	11.16	8.06	5.92	4.09	2.99	2.42	2.04	1.50	1.22	1.00	0.82	0.60	0.50	0.41	0.34	0.28	0.23	0.18	0.14
4.63	1393.52	699.63	462.83	353.93	250.70	176.97	120.34	79.17	60.17	41.21	30.39	21.49	15.04	11.57	8.36	6.14	4.24	3.10	2.51	2.12	1.55	1.26	1.04	0.85	0.62	0.52	0.43	0.35	0.29	0.23	0.19	0.15
3.98	1297.42	757.68	501.24	383.30	271.50	191.65	130.32	85.74	65.16	44.63	32.91	23.27	16.29	12.53	9.05	6.65	4.59	3.36	2.72	2.29	1.68	1.37	1.13	0.92	0.68	0.56	0.46	0.38	0.32	0.25	0.20	0.16
3.57	1228.77	800.76	529.73	405.09	286.94	202.55	137.73	90.61	68.87	47.17	34.78	24.59	17.22	13.24	9.56	7.03	4.85	3.55	2.87	2.42	1.77	1.45	1.19	0.97	0.71	0.59	0.49	0.41	0.33	0.27	0.21	0.17
3.18	1160.13	848.85	561.55	429.42	304.17	214.71	146.00	96.05	73.00	50.00	36.87	26.07	18.25	14.04	10.14	7.45	5.14	3.76	3.04	2.57	1.88	1.53	1.26	1.03	0.76	0.63	0.52	0.43	0.35	0.28	0.23	0.18
2.87	1098.34	889.44	588.40	449.95	318.72	224.98	152.98	100.65	76.49	52.39	38.63	27.32	19.12	14.71	10.62	7.81	5.39	3.94	3.19	2.69	1.97	1.61	1.32	1.08	0.79	0.66	0.54	0.45	0.37	0.30	0.24	0.19
2.53	1029.70	945.26	625.32	478.19	338.72	239.09	162.58	106.96	81.29	55.68	41.06	29.03	20.32	15.63	11.29	8.30	5.72	4.19	3.39	2.86	2.10	1.71	1.41	1.15	0.84	0.70	0.57	0.48	0.40	0.32	0.25	0.20
2.30	981.65	992.23	656.40	501.95	355.55	250.98	170.66	112.28	85.33	58.45	43.10	30.48	21.33	16.41	11.85	8.71	6.01	4.40	3.56	3.00	2.20	1.79	1.48	1.21	0.89	0.74	0.60	0.50	0.41	0.33	0.27	0.21

DISCO DRIVES (KING'S LYNN) LIMITED, OLDMEDOW ROAD, HARDWICK INDUSTRIAL ESTATE, KING'S LYNN, NORFOLK. PE30 4LE.
TEL: +44(0)1553 761331, FAX: +44(0)1553 692137, WEB: www.discodrives.co.uk, EMAIL: sales@discodrives.co.uk

	kW	0.06	0.09	0.12	0.18	0.25	0.37	0.55	0.75	1.10	1.50	2.20	3.00	4.00	5.50	7.50	11.00	15.00	18.50	22.00	30.00	37.00	45.00	55.00	75.00	90.00	110.00	132.00	160.00	200.00	250.00	315.00
RATIO	NM	0.43	0.65	0.85	1.20	1.70	2.50	3.80	5.00	7.30	9.90	14.00	20.00	26.00	36.00	49.00	71.00	97.00	120.00	142.00	194.00	238.00	289.00	354.00	482.00	579.00	707.00	849.00	1029.00	1286.00	1602.00	2019.00
118.31	6603.80	129.81	85.87	65.67	46.51	32.83	22.33	14.69	11.16	7.65	5.64	3.99	2.79	2.15	1.55	1.14	0.79	0.58	0.47	0.39	0.29	0.23	0.19	0.16	0.12	0.10	0.08	0.07	0.05	0.04	0.03	0.03
101.40	6418.45	147.20	97.38	74.47	52.75	37.23	25.32	16.66	12.66	8.67	6.39	4.52	3.16	2.43	1.76	1.29	0.89	0.65	0.53	0.45	0.33	0.27	0.22	0.18	0.13	0.11	0.09	0.07	0.06	0.05	0.04	0.03
88.34	6288.02	165.54	109.51	83.74	59.32	41.87	28.47	18.73	14.24	9.75	7.19	5.08	3.56	2.74	1.98	1.45	1.00	0.73	0.59	0.50	0.37	0.30	0.25	0.20	0.15	0.12	0.10	0.08	0.07	0.06	0.04	0.04
78.87	6178.19	182.17	120.51	92.16	65.28	46.08	31.33	20.61	15.67	10.73	7.91	5.60	3.92	3.01	2.18	1.60	1.10	0.81	0.65	0.55	0.40	0.33	0.27	0.22	0.16	0.14	0.11	0.09	0.08	0.06	0.05	0.04
71.05	6054.63	198.17	131.10	100.25	71.01	50.13	34.09	22.42	17.04	11.67	8.61	6.09	4.26	3.28	2.37	1.74	1.20	0.88	0.71	0.60	0.44	0.36	0.29	0.24	0.18	0.15	0.12	0.10	0.08	0.07	0.05	0.04
64.49	5985.98	215.88	142.81	109.21	77.36	54.60	37.13	24.43	18.57	12.72	9.38	6.63	4.64	3.57	2.58	1.89	1.31	0.96	0.77	0.65	0.48	0.39	0.32	0.26	0.19	0.16	0.13	0.11	0.09	0.07	0.06	0.05
56.79	5937.93	243.17	160.87	123.02	87.14	61.51	41.83	27.52	20.91	14.32	10.56	7.47	5.23	4.02	2.90	2.13	1.47	1.08	0.87	0.74	0.54	0.44	0.36	0.30	0.22	0.18	0.15	0.12	0.10	0.08	0.07	0.05
52.54	5889.87	260.68	172.45	131.87	93.41	65.94	44.84	29.50	22.42	15.36	11.32	8.01	5.60	4.31	3.11	2.29	1.58	1.16	0.93	0.79	0.58	0.47	0.39	0.32	0.23	0.19	0.16	0.13	0.11	0.09	0.07	0.06
47.11	5766.31	284.64	188.30	143.99	102.00	72.00	48.96	32.21	24.48	16.77	12.36	8.74	6.12	4.71	3.40	2.50	1.72	1.26	1.02	0.86	0.63	0.51	0.42	0.35	0.25	0.21	0.17	0.14	0.12	0.10	0.08	0.06
44.17	5697.66	300.00	198.46	151.76	107.50	75.88	51.60	33.95	25.80	17.67	13.03	9.21	6.45	4.96	3.58	2.63	1.82	1.33	1.07	0.91	0.66	0.54	0.45	0.36	0.27	0.22	0.18	0.15	0.13	0.10	0.08	0.06
40.03	5601.56	325.45	215.30	164.64	116.62	82.32	55.98	36.83	27.99	19.17	14.14	10.00	7.00	5.38	3.89	2.86	1.97	1.44	1.17	0.99	0.72	0.59	0.48	0.40	0.29	0.24	0.20	0.16	0.14	0.11	0.09	0.07
33.98	5526.05	378.25	250.23	191.35	135.54	95.68	65.06	42.80	32.53	22.28	16.43	11.62	8.13	6.26	4.52	3.32	2.29	1.68	1.36	1.15	0.84	0.68	0.56	0.46	0.34	0.28	0.23	0.19	0.16	0.13	0.10	0.08
30.92	5471.13	411.53	272.24	208.19	147.47	104.09	70.78	46.57	35.39	24.24	17.87	12.64	8.85	6.81	4.92	3.61	2.49	1.82	1.47	1.25	0.91	0.74	0.61	0.50	0.37	0.31	0.25	0.21	0.17	0.14	0.11	0.09
28.01	5409.35	449.14	297.12	227.21	160.94	113.61	77.25	50.82	38.63	26.46	19.51	13.79	9.66	7.43	5.36	3.94	2.72	1.99	1.61	1.36	1.00	0.81	0.67	0.55	0.40	0.33	0.27	0.23	0.19	0.15	0.12	0.10
25.10	5285.78	489.66	323.93	247.71	175.46	123.86	84.22	55.41	42.11	28.84	21.27	15.04	10.53	8.10	5.85	4.30	2.97	2.17	1.75	1.48	1.09	0.88	0.73	0.59	0.44	0.36	0.30	0.25	0.20	0.16	0.13	0.10
21.92	5114.17	542.46	358.86	274.42	194.38	137.21	93.30	61.38	46.65	31.95	23.56	16.66	11.66	8.97	6.48	4.76	3.29	2.40	1.94	1.64	1.20	0.98	0.81	0.66	0.48	0.40	0.33	0.27	0.23	0.18	0.15	0.12
18.37	4915.09	622.32	411.69	314.82	223.00	157.41	107.04	70.42	53.52	36.66	27.03	19.11	13.38	10.29	7.43	5.46	3.77	2.76	2.23	1.88	1.38	1.12	0.93	0.76	0.56	0.46	0.38	0.32	0.26	0.21	0.17	0.13
17.06	4798.39	653.92	432.59	330.81	234.32	165.40	112.47	74.00	56.24	38.52	28.40	20.08	14.06	10.81	7.81	5.74	3.96	2.90	2.34	1.98	1.45	1.18	0.97	0.79	0.58	0.49	0.40	0.33	0.27	0.22	0.18	0.14
15.21	4633.64	708.28	468.55	358.30	253.80	179.15	121.82	80.15	60.91	41.72	30.76	21.75	15.23	11.71	8.46	6.22	4.29	3.14	2.54	2.14	1.57	1.28	1.05	0.86	0.63	0.53	0.43	0.36	0.30	0.24	0.19	0.15
13.85	4462.03	749.44	495.78	379.13	268.55	189.56	128.90	84.80	64.45	44.14	32.55	23.02	16.11	12.39	8.95	6.58	4.54	3.32	2.69	2.27	1.66	1.35	1.12	0.91	0.67	0.56	0.46	0.38	0.31	0.25	0.20	0.16
12.76	4304.14	784.34	518.87	396.78	281.05	198.39	134.91	88.75	67.45	46.20	34.07	24.09	16.86	12.97	9.37	6.88	4.75	3.48	2.81	2.38	1.74	1.42	1.17	0.95	0.70	0.58	0.48	0.40	0.33	0.26	0.21	0.17
10.97	4002.09	848.31	561.19	429.15	303.98	214.57	145.91	95.99	72.95	49.97	36.85	26.06	18.24	14.03	10.13	7.44	5.14	3.76	3.04	2.57	1.88	1.53	1.26	1.03	0.76	0.63	0.52	0.43	0.35	0.28	0.23	0.18
10.29	3981.50	900.21	595.52	455.40	322.58	227.70	154.84	101.87	77.42	53.03	39.10	27.65	19.35	14.89	10.75	7.90	5.45	3.99	3.23	2.73	2.00	1.63	1.34	1.09	0.80	0.67	0.55	0.46	0.38	0.30	0.24	0.19
9.32	3782.42	943.67	624.27	477.39	338.15	238.69	162.31	106.78	81.16	55.59	40.99	28.98	20.29	15.61	11.27	8.28	5.72	4.18	3.38	2.86	2.09	1.70	1.40	1.15	0.84	0.70	0.57	0.48	0.39	0.32	0.25	0.20
8.71	3638.27	970.94	642.32	491.18	347.92	245.59	167.00	109.87	83.50	57.19	42.17	29.82	20.88	16.06	11.60	8.52	5.88	4.30	3.48	2.94	2.15	1.75	1.44	1.18	0.87	0.72	0.59	0.49	0.41	0.32	0.26	0.21
7.96	3514.70	1026.96	679.37	519.52	367.99	259.76	176.64	116.21	88.32	60.49	44.61	31.54	22.08	16.98	12.27	9.01	6.22	4.55	3.68	3.11	2.28	1.86	1.53	1.25	0.92	0.76	0.62	0.52	0.43	0.34	0.28	0.22
7.36	3349.95	1057.85	699.81	535.15	379.06	267.57	181.95	119.70	90.98	62.31	45.95	32.49	22.74	17.50	12.64	9.28	6.41	4.69	3.79	3.20	2.34	1.91	1.57	1.28	0.94	0.79	0.64	0.54	0.44	0.35	0.28	0.23
6.60	3137.15	1104.88	730.92	558.94	395.91	279.47	190.04	125.03	95.02	65.08	47.99	33.94	23.75	18.27	13.20	9.70	6.69	4.90	3.96	3.35	2.45	2.00	1.64	1.34	0.99	0.82	0.67	0.56	0.46	0.37	0.30	0.24
6.19	3082.23	1157.90	766.00	585.76	414.92	292.88	199.16	131.03	99.58	68.21	50.29	35.56	24.89	19.15	13.83	10.16	7.01	5.13	4.15	3.51	2.57	2.09	1.72	1.41	1.03	0.86	0.70	0.59	0.48	0.39	0.31	0.25
5.61	2896.88	1200.86	794.41	607.49	430.31	303.75	206.55	135.89	103.27	70.74	52.16	36.88	25.82	19.86	14.34	10.54	7.27	5.32	4.30	3.64	2.66	2.17	1.79	1.46	1.07	0.89	0.73	0.61	0.50	0.40	0.32	0.26
5.04	2704.67	1247.80	825.47	631.24	447.13	315.62	214.62	141.20	107.31	73.50	54.20	38.33	26.83	20.64	14.90	10.95	7.56	5.53	4.47	3.78	2.77	2.25	1.86	1.52	1.11	0.93	0.76	0.63	0.52	0.42	0.33	0.27
4.63	2594.84	1302.76	861.83	659.04	466.82	329.52	224.07	147.42	112.04	76.74	56.58	40.01	28.01	21.55	15.56	11.43	7.89	5.78	4.67	3.94	2.89	2.35	1.94	1.58	1.16	0.97	0.79	0.66	0.54	0.44	0.35	0.28
3.98	2402.63	1403.11	928.21	709.81	502.78	354.91	241.34	158.77	120.67	82.65	60.94	43.10	30.17	23.21	16.76	12.31	8.50	6.22	5.03	4.25	3.11	2.54	2.09	1.70	1.25	1.04	0.85	0.71	0.59	0.47	0.38	0.30
3.57	2258.47	1471.79	973.64	744.55	527.39	372.28	253.15	166.54	126.57	86.69	63.93	45.20	31.64	24.34	17.58	12.92	8.91	6.52	5.27	4.46	3.26	2.66	2.19	1.79	1.31	1.09	0.90	0.75	0.62	0.49	0.40	0.31
3.18	2107.45	1542.00	1020.09	780.07	552.55	390.03	265.22	174.49	132.61	90.83	66.98	47.36	33.15	25.50	18.42	13.53	9.34	6.84	5.53	4.67	3.42	2.79	2.29	1.87	1.38	1.15	0.94	0.78	0.64	0.52	0.41	0.33
2.87	1970.16	1595.43	1055.44	807.10	571.70	403.55	274.41	180.54	137.21	93.98	69.30	49.00	34.30	26.39	19.06	14.00	9.66	7.07	5.72	4.83	3.54	2.88	2.37	1.94	1.42	1.18	0.97	0.81	0.67	0.53	0.43	0.34
2.53	1819.13	1669.95	1104.74	844.80	598.40	422.40	287.23	188.97	143.62	98.37	72.53	51.29	35.90	27.62	19.95	14.65	10.11	7.40	5.98	5.06	3.70	3.02	2.48	2.03	1.49	1.24	1.02	0.85	0.70	0.56	0.45	0.36
2.30	1681.84	1699.97	1124.60	859.99	609.16	429.99	292.40	192.37	146.20	100.14	73.84	52.21	36.55	28.11	20.31	14.92	10.30	7.54	6.09	5.15	3.77	3.07	2.53	2.06	1.52	1.26	1.03	0.86	0.71	0.57	0.46	0.36

DISCO DRIVES (KING'S LYNN) LIMITED, OLDMEDOW ROAD, HARDWICK INDUSTRIAL ESTATE, KING'S LYNN, NORFOLK. PE30 4LE.
TEL: +44(0)1553 761331, FAX: +44(0)1553 692137, WEB: www.discodrives.co.uk, EMAIL: sales@discodrives.co.uk

ESR6

	kW	0.06	0.09	0.12	0.18	0.25	0.37	0.55	0.75	1.10	1.50	2.20	3.00	4.00	5.50	7.50	11.00	15.00	18.50	22.00	30.00	37.00	45.00	55.00	75.00	90.00	110.00	132.00	160.00	200.00	250.00	315.00
RATIO	NM	0.43	0.65	0.85	1.20	1.70	2.50	3.80	5.00	7.30	9.90	14.00	20.00	26.00	36.00	49.00	71.00	97.00	120.00	142.00	194.00	238.00	289.00	354.00	482.00	579.00	707.00	849.00	1029.00	1286.00	1602.00	2019.00
4.60	21.09	10.66	7.05	5.39	3.82	2.70	1.83	1.21	0.92	0.63	0.46	0.33	0.23	0.18	0.13	0.09	0.06	0.05	0.04	0.03	0.02	0.02	0.02	0.01	0.01	0.01	0.01	0.01	0.00	0.00	0.00	0.00
4.05	21.52	12.36	8.17	6.25	4.43	3.13	2.13	1.40	1.06	0.73	0.54	0.38	0.27	0.20	0.15	0.11	0.07	0.05	0.04	0.04	0.03	0.02	0.02	0.02	0.01	0.01	0.01	0.01	0.01	0.00	0.00	0.00
3.58	21.30	13.84	9.15	7.00	4.96	3.50	2.38	1.57	1.19	0.82	0.60	0.42	0.30	0.23	0.17	0.12	0.08	0.06	0.05	0.04	0.03	0.02	0.02	0.02	0.01	0.01	0.01	0.01	0.01	0.00	0.00	0.00
3.23	21.33	15.36	10.16	7.77	5.50	3.88	2.64	1.74	1.32	0.90	0.67	0.47	0.33	0.25	0.18	0.13	0.09	0.07	0.06	0.05	0.03	0.03	0.02	0.02	0.01	0.01	0.01	0.01	0.01	0.01	0.00	0.00
2.86	21.92	17.82	11.79	9.02	6.39	4.51	3.07	2.02	1.53	1.05	0.77	0.55	0.38	0.29	0.21	0.16	0.11	0.08	0.06	0.05	0.04	0.03	0.03	0.02	0.02	0.01	0.01	0.01	0.01	0.01	0.00	0.00
2.58	21.35	19.24	12.73	9.74	6.90	4.87	3.31	2.18	1.66	1.13	0.84	0.59	0.41	0.32	0.23	0.17	0.12	0.09	0.07	0.06	0.04	0.03	0.03	0.02	0.02	0.01	0.01	0.01	0.01	0.01	0.01	0.00
2.29	21.35	21.68	14.34	10.97	7.77	5.48	3.73	2.45	1.86	1.28	0.94	0.67	0.47	0.36	0.26	0.19	0.13	0.10	0.08	0.07	0.05	0.04	0.03	0.03	0.02	0.02	0.01	0.01	0.01	0.01	0.01	0.00
2.11	20.99	23.13	15.30	11.70	8.29	5.85	3.98	2.62	1.99	1.36	1.00	0.71	0.50	0.38	0.28	0.20	0.14	0.10	0.08	0.07	0.05	0.04	0.03	0.03	0.02	0.02	0.01	0.01	0.01	0.01	0.01	0.00
1.89	19.79	24.35	16.11	12.32	8.73	6.16	4.19	2.76	2.09	1.43	1.06	0.75	0.52	0.40	0.29	0.21	0.15	0.11	0.09	0.07	0.05	0.04	0.04	0.03	0.02	0.02	0.01	0.01	0.01	0.01	0.01	0.01
1.75	19.36	25.73	17.02	13.02	9.22	6.51	4.43	2.91	2.21	1.52	1.12	0.79	0.55	0.43	0.31	0.23	0.16	0.11	0.09	0.08	0.06	0.05	0.04	0.03	0.02	0.02	0.02	0.01	0.01	0.01	0.01	0.01
1.58	17.58	25.88	17.12	13.09	9.27	6.55	4.45	2.93	2.23	1.52	1.12	0.79	0.56	0.43	0.31	0.23	0.16	0.11	0.09	0.08	0.06	0.05	0.04	0.03	0.02	0.02	0.02	0.01	0.01	0.01	0.01	0.01

ESR7

	kW	0.06	0.09	0.12	0.18	0.25	0.37	0.55	0.75	1.10	1.50	2.20	3.00	4.00	5.50	7.50	11.00	15.00	18.50	22.00	30.00	37.00	45.00	55.00	75.00	90.00	110.00	132.00	160.00	200.00	250.00	315.00
RATIO	NM	0.43	0.65	0.85	1.20	1.70	2.50	3.80	5.00	7.30	9.90	14.00	20.00	26.00	36.00	49.00	71.00	97.00	120.00	142.00	194.00	238.00	289.00	354.00	482.00	579.00	707.00	849.00	1029.00	1286.00	1602.00	2019.00
4.60	37.47	18.94	12.53	9.58	6.79	4.79	3.26	2.14	1.63	1.12	0.82	0.58	0.41	0.31	0.23	0.17	0.11	0.08	0.07	0.06	0.04	0.03	0.03	0.02	0.02	0.01	0.01	0.01	0.01	0.01	0.01	0.00
4.05	38.27	21.98	14.54	11.12	7.87	5.56	3.78	2.49	1.89	1.29	0.95	0.67	0.47	0.36	0.26	0.19	0.13	0.10	0.08	0.07	0.05	0.04	0.03	0.03	0.02	0.02	0.01	0.01	0.01	0.01	0.01	0.00
3.58	38.61	25.08	16.59	12.69	8.99	6.34	4.31	2.84	2.16	1.48	1.09	0.77	0.54	0.41	0.30	0.22	0.15	0.11	0.09	0.08	0.06	0.05	0.04	0.03	0.02	0.02	0.02	0.01	0.01	0.01	0.01	0.01
3.23	39.42	28.38	18.78	14.36	10.17	7.18	4.88	3.21	2.44	1.67	1.23	0.87	0.61	0.47	0.34	0.25	0.17	0.13	0.10	0.09	0.06	0.05	0.04	0.03	0.03	0.02	0.02	0.01	0.01	0.01	0.01	0.01
2.86	41.48	33.73	22.31	17.06	12.09	8.53	5.80	3.82	2.90	1.99	1.46	1.04	0.73	0.56	0.40	0.30	0.20	0.15	0.12	0.10	0.07	0.06	0.05	0.04	0.03	0.03	0.02	0.02	0.01	0.01	0.01	0.01
2.58	41.15	37.09	24.54	18.76	13.29	9.38	6.38	4.20	3.19	2.18	1.61	1.14	0.80	0.61	0.44	0.33	0.22	0.16	0.13	0.11	0.08	0.07	0.06	0.05	0.03	0.03	0.02	0.02	0.02	0.01	0.01	0.01
2.29	37.88	38.47	25.45	19.46	13.78	9.73	6.62	4.35	3.31	2.27	1.67	1.18	0.83	0.64	0.46	0.34	0.23	0.17	0.14	0.12	0.09	0.07	0.06	0.05	0.03	0.03	0.02	0.02	0.02	0.01	0.01	0.01
2.11	37.28	41.09	27.18	20.79	14.72	10.39	7.07	4.65	3.53	2.42	1.78	1.26	0.88	0.68	0.49	0.36	0.25	0.18	0.15	0.12	0.09	0.07	0.06	0.05	0.04	0.03	0.02	0.02	0.02	0.01	0.01	0.01
1.89	35.14	43.24	28.60	21.87	15.49	10.94	7.44	4.89	3.72	2.55	1.88	1.33	0.93	0.72	0.52	0.38	0.26	0.19	0.15	0.13	0.10	0.08	0.06	0.05	0.04	0.03	0.03	0.02	0.02	0.01	0.01	0.01
1.75	34.38	45.69	30.22	23.11	16.37	11.56	7.86	5.17	3.93	2.69	1.98	1.40	0.98	0.76	0.55	0.40	0.28	0.20	0.16	0.14	0.10	0.08	0.07	0.06	0.04	0.03	0.03	0.02	0.02	0.02	0.01	0.01
1.58	33.79	49.74	32.90	25.16	17.82	12.58	8.55	5.63	4.28	2.93	2.16	1.53	1.07	0.82	0.59	0.44	0.30	0.22	0.18	0.15	0.11	0.09	0.07	0.06	0.04	0.04	0.03	0.03	0.02	0.02	0.01	0.01

ESR8

	kW	0.06	0.09	0.12	0.18	0.25	0.37	0.55	0.75	1.10	1.50	2.20	3.00	4.00	5.50	7.50	11.00	15.00	18.50	22.00	30.00	37.00	45.00	55.00	75.00	90.00	110.00	132.00	160.00	200.00	250.00	315.00
RATIO	NM	0.43	0.65	0.85	1.20	1.70	2.50	3.80	5.00	7.30	9.90	14.00	20.00	26.00	36.00	49.00	71.00	97.00	120.00	142.00	194.00	238.00	289.00	354.00	482.00	579.00	707.00	849.00	1029.00	1286.00	1602.00	2019.00
4.68	85.64	42.56	28.15	21.53	15.25	10.76	7.32	4.82	3.66	2.51	1.85	1.31	0.91	0.70	0.51	0.37	0.26	0.19	0.15	0.13	0.09	0.08	0.06	0.05	0.04	0.03	0.03	0.02	0.02	0.01	0.01	0.01
4.04	92.41	53.19	35.19	26.91	19.06	13.46	9.15	6.02	4.57	3.13	2.31	1.63	1.14	0.88	0.64	0.47	0.32	0.24	0.19	0.16	0.12	0.10	0.08	0.06	0.05	0.04	0.03	0.03	0.02	0.02	0.01	0.01
3.59	89.87	58.22	38.51	29.45	20.86	14.73	10.01	6.59	5.01	3.43	2.53	1.79	1.25	0.96	0.70	0.51	0.35	0.26	0.21	0.18	0.13	0.11	0.09	0.07	0.05	0.04	0.04	0.03	0.02	0.02	0.02	0.01
3.20	93.84	68.20	45.12	34.50	24.44	17.25	11.73	7.72	5.87	4.02	2.96	2.09	1.47	1.13	0.81	0.60	0.41	0.30	0.24	0.21	0.15	0.12	0.10	0.08	0.06	0.05	0.04	0.03	0.03	0.02	0.02	0.01
2.88	89.25	72.07	47.68	36.46	25.82	18.23	12.40	8.16	6.20	4.25	3.13	2.21	1.55	1.19	0.86	0.63	0.44	0.32	0.26	0.22	0.16	0.13	0.11	0.09	0.06	0.05	0.04	0.04	0.03	0.02	0.02	0.02
2.57	90.42	81.82	54.13	41.39	29.32	20.70	14.07	9.26	7.04	4.82	3.55	2.51	1.76	1.35	0.98	0.72	0.50	0.36	0.29	0.25	0.18	0.15	0.12	0.10	0.07	0.06	0.05	0.04	0.03	0.03	0.02	0.02
2.32	89.20	89.41	59.15	45.23	32.04	22.62	15.38	10.12	7.69	5.27	3.88	2.75	1.92	1.48	1.07	0.78	0.54	0.40	0.32	0.27	0.20	0.16	0.13	0.11	0.08	0.07	0.05	0.05	0.04	0.03	0.02	0.02
2.10	86.20	95.46	63.15	48.29	34.21	24.15	16.42	10.80	8.21	5.62	4.15	2.93	2.05	1.58	1.14	0.84	0.58	0.42	0.34	0.29	0.21	0.17	0.14	0.12	0.09	0.07	0.06	0.05	0.04	0.03	0.03	0.02
1.91	84.56	102.96	68.11	52.09	36.89	26.04	17.71	11.65	8.85	6.06	4.47	3.16	2.21	1.70	1.23	0.90	0.62	0.46	0.37	0.31	0.23	0.19	0.15	0.13	0.09	0.08	0.06	0.05	0.04	0.03	0.03	0.02
1.76	81.67	107.91	71.39	54.59	38.67	27.30	18.56	12.21	9.28	6.36	4.69	3.31	2.32	1.78	1.29	0.95	0.65	0.48	0.39	0.33	0.24	0.19	0.16	0.13	0.10	0.08	0.07	0.05	0.05	0.04	0.03	0.02
1.58	79.17	116.53	77.09	58.95	41.76	29.48	20.04	13.19	10.02	6.86	5.06	3.58	2.51	1.93	1.39	1.02	0.71	0.52	0.42	0.35	0.26	0.21	0.17	0.14	0.10	0.09	0.07	0.06	0.05	0.04	0.03	0.02

DISCO DRIVES (KING'S LYNN) LIMITED, OLDMEDOW ROAD, HARDWICK INDUSTRIAL ESTATE, KING'S LYNN, NORFOLK. PE30 4LE.
TEL: +44(0)1553 761331, FAX: +44(0)1553 692137, WEB: www.discodrives.co.uk, EMAIL: sales@discodrives.co.uk

ESR9

	kW	0.06	0.09	0.12	0.18	0.25	0.37	0.55	0.75	1.10	1.50	2.20	3.00	4.00	5.50	7.50	11.00	15.00	18.50	22.00	30.00	37.00	45.00	55.00	75.00	90.00	110.00	132.00	160.00	200.00	250.00	315.00
RATIO	NM	0.43	0.65	0.85	1.20	1.70	2.50	3.80	5.00	7.30	9.90	14.00	20.00	26.00	36.00	49.00	71.00	97.00	120.00	142.00	194.00	238.00	289.00	354.00	482.00	579.00	707.00	849.00	1029.00	1286.00	1602.00	2019.00
60.00	12.20	0.47	0.31	0.24	0.17	0.12	0.08	0.05	0.04	0.03	0.02	0.01	0.01	0.01	0.01	0.00	0.00	0.00	0.00	0.00	0.00	0.00	0.00	0.00	0.00	0.00	0.00	0.00	0.00	0.00	0.00	0.00
50.00	14.40	0.67	0.44	0.34	0.24	0.17	0.12	0.08	0.06	0.04	0.03	0.02	0.01	0.01	0.01	0.01	0.00	0.00	0.00	0.00	0.00	0.00	0.00	0.00	0.00	0.00	0.00	0.00	0.00	0.00	0.00	0.00
41.00	16.40	0.93	0.62	0.47	0.33	0.24	0.16	0.11	0.08	0.05	0.04	0.03	0.02	0.02	0.01	0.01	0.01	0.00	0.00	0.00	0.00	0.00	0.00	0.00	0.00	0.00	0.00	0.00	0.00	0.00	0.00	0.00
30.00	20.30	1.57	1.04	0.80	0.56	0.40	0.27	0.18	0.14	0.09	0.07	0.05	0.03	0.03	0.02	0.01	0.01	0.01	0.01	0.00	0.00	0.00	0.00	0.00	0.00	0.00	0.00	0.00	0.00	0.00	0.00	0.00
25.00	21.70	2.02	1.34	1.02	0.72	0.51	0.35	0.23	0.17	0.12	0.09	0.06	0.04	0.03	0.02	0.02	0.01	0.01	0.01	0.01	0.00	0.00	0.00	0.00	0.00	0.00	0.00	0.00	0.00	0.00	0.00	0.00
20.00	14.90	1.73	1.15	0.88	0.62	0.44	0.30	0.20	0.15	0.10	0.08	0.05	0.04	0.03	0.02	0.02	0.01	0.01	0.01	0.01	0.00	0.00	0.00	0.00	0.00	0.00	0.00	0.00	0.00	0.00	0.00	0.00
14.50	14.90	2.39	1.58	1.21	0.86	0.60	0.41	0.27	0.21	0.14	0.10	0.07	0.05	0.04	0.03	0.02	0.01	0.01	0.01	0.01	0.01	0.00	0.00	0.00	0.00	0.00	0.00	0.00	0.00	0.00	0.00	0.00
9.50	14.30	3.50	2.32	1.77	1.25	0.89	0.60	0.40	0.30	0.21	0.15	0.11	0.08	0.06	0.04	0.03	0.02	0.02	0.01	0.01	0.01	0.01	0.01	0.00	0.00	0.00	0.00	0.00	0.00	0.00	0.00	0.00
7.33	11.60	3.68	2.43	1.86	1.32	0.93	0.63	0.42	0.32	0.22	0.16	0.11	0.08	0.06	0.04	0.03	0.02	0.02	0.01	0.01	0.01	0.01	0.01	0.00	0.00	0.00	0.00	0.00	0.00	0.00	0.00	0.00
5.00	10.20	4.74	3.14	2.40	1.70	1.20	0.82	0.54	0.41	0.28	0.21	0.15	0.10	0.08	0.06	0.04	0.03	0.02	0.02	0.01	0.01	0.01	0.01	0.01	0.00	0.00	0.00	0.00	0.00	0.00	0.00	0.00

ESR10

	kW	0.06	0.09	0.12	0.18	0.25	0.37	0.55	0.75	1.10	1.50	2.20	3.00	4.00	5.50	7.50	11.00	15.00	18.50	22.00	30.00	37.00	45.00	55.00	75.00	90.00	110.00	132.00	160.00	200.00	250.00	315.00
RATIO	NM	0.43	0.65	0.85	1.20	1.70	2.50	3.80	5.00	7.30	9.90	14.00	20.00	26.00	36.00	49.00	71.00	97.00	120.00	142.00	194.00	238.00	289.00	354.00	482.00	579.00	707.00	849.00	1029.00	1286.00	1602.00	2019.00
60.00	27.50	1.07	0.71	0.54	0.38	0.27	0.18	0.12	0.09	0.06	0.05	0.03	0.02	0.02	0.01	0.01	0.01	0.00	0.00	0.00	0.00	0.00	0.00	0.00	0.00	0.00	0.00	0.00	0.00	0.00	0.00	0.00
50.00	35.70	1.66	1.10	0.84	0.60	0.42	0.29	0.19	0.14	0.10	0.07	0.05	0.04	0.03	0.02	0.01	0.01	0.01	0.01	0.01	0.00	0.00	0.00	0.00	0.00	0.00	0.00	0.00	0.00	0.00	0.00	0.00
40.00	43.30	2.52	1.67	1.27	0.90	0.64	0.43	0.28	0.22	0.15	0.11	0.08	0.05	0.04	0.03	0.02	0.02	0.01	0.01	0.01	0.01	0.00	0.00	0.00	0.00	0.00	0.00	0.00	0.00	0.00	0.00	0.00
29.00	53.60	4.30	2.84	2.17	1.54	1.09	0.74	0.49	0.37	0.25	0.19	0.13	0.09	0.07	0.05	0.04	0.03	0.02	0.02	0.01	0.01	0.01	0.01	0.01	0.00	0.00	0.00	0.00	0.00	0.00	0.00	0.00
26.00	57.50	5.14	3.40	2.60	1.84	1.30	0.88	0.58	0.44	0.30	0.22	0.16	0.11	0.09	0.06	0.05	0.03	0.02	0.02	0.02	0.01	0.01	0.01	0.01	0.00	0.00	0.00	0.00	0.00	0.00	0.00	0.00
21.00	38.00	4.21	2.78	2.13	1.51	1.06	0.72	0.48	0.36	0.25	0.18	0.13	0.09	0.07	0.05	0.04	0.03	0.02	0.02	0.01	0.01	0.01	0.01	0.01	0.00	0.00	0.00	0.00	0.00	0.00	0.00	0.00
14.50	46.20	7.41	4.90	3.75	2.66	1.87	1.27	0.84	0.64	0.44	0.32	0.23	0.16	0.12	0.09	0.07	0.04	0.03	0.03	0.02	0.02	0.01	0.01	0.01	0.01	0.01	0.00	0.00	0.00	0.00	0.00	0.00
13.00	49.80	8.91	5.89	4.51	3.19	2.25	1.53	1.01	0.77	0.52	0.39	0.27	0.19	0.15	0.11	0.08	0.05	0.04	0.03	0.03	0.02	0.02	0.01	0.01	0.01	0.01	0.01	0.00	0.00	0.00	0.00	0.00
10.50	43.90	9.72	6.43	4.92	3.48	2.46	1.67	1.10	0.84	0.57	0.42	0.30	0.21	0.16	0.12	0.09	0.06	0.04	0.03	0.03	0.02	0.02	0.01	0.01	0.01	0.01	0.01	0.00	0.00	0.00	0.00	0.00
7.33	38.80	12.31	8.14	6.23	4.41	3.11	2.12	1.39	1.06	0.73	0.53	0.38	0.26	0.20	0.15	0.11	0.07	0.05	0.04	0.04	0.03	0.02	0.02	0.01	0.01	0.01	0.01	0.01	0.01	0.00	0.00	0.00
5.20	30.60	13.69	9.05	6.92	4.90	3.46	2.35	1.55	1.18	0.81	0.59	0.42	0.29	0.23	0.16	0.12	0.08	0.06	0.05	0.04	0.03	0.02	0.02	0.02	0.01	0.01	0.01	0.01	0.01	0.00	0.00	0.00

ESR11

	kW	0.06	0.09	0.12	0.18	0.25	0.37	0.55	0.75	1.10	1.50	2.20	3.00	4.00	5.50	7.50	11.00	15.00	18.50	22.00	30.00	37.00	45.00	55.00	75.00	90.00	110.00	132.00	160.00	200.00	250.00	315.00
RATIO	NM	0.43	0.65	0.85	1.20	1.70	2.50	3.80	5.00	7.30	9.90	14.00	20.00	26.00	36.00	49.00	71.00	97.00	120.00	142.00	194.00	238.00	289.00	354.00	482.00	579.00	707.00	849.00	1029.00	1286.00	1602.00	2019.00
60.00	62.40	2.42	1.60	1.22	0.87	0.61	0.42	0.27	0.21	0.14	0.11	0.07	0.05	0.04	0.03	0.02	0.01	0.01	0.01	0.01	0.01	0.00	0.00	0.00	0.00	0.00	0.00	0.00	0.00	0.00	0.00	0.00
50.00	74.90	3.48	2.30	1.76	1.25	0.88	0.60	0.39	0.30	0.21	0.15	0.11	0.07	0.06	0.04	0.03	0.02	0.02	0.01	0.01	0.01	0.01	0.01	0.00	0.00	0.00	0.00	0.00	0.00	0.00	0.00	0.00
40.00	91.90	5.34	3.53	2.70	1.91	1.35	0.92	0.60	0.46	0.31	0.23	0.16	0.11	0.09	0.06	0.05	0.03	0.02	0.02	0.02	0.01	0.01	0.01	0.01	0.00	0.00	0.00	0.00	0.00	0.00	0.00	0.00
30.00	117.00	9.07	6.00	4.59	3.25	2.29	1.56	1.03	0.78	0.53	0.39	0.28	0.20	0.15	0.11	0.08	0.05	0.04	0.03	0.03	0.02	0.02	0.01	0.01	0.01	0.01	0.01	0.00	0.00	0.00	0.00	0.00
25.00	123.00	11.44	7.57	5.79	4.10	2.89	1.97	1.29	0.98	0.67	0.50	0.35	0.25	0.19	0.14	0.10	0.07	0.05	0.04	0.03	0.03	0.02	0.02	0.01	0.01	0.01	0.01	0.01	0.00	0.00	0.00	0.00
20.00	93.60	10.88	7.20	5.51	3.90	2.75	1.87	1.23	0.94	0.64	0.47	0.33	0.23	0.18	0.13	0.10	0.07	0.05	0.04	0.03	0.02	0.02	0.02	0.01	0.01	0.01	0.01	0.01	0.00	0.00	0.00	0.00
15.00	93.60	14.51	9.60	7.34	5.20	3.67	2.50	1.64	1.25	0.85	0.63	0.45	0.31	0.24	0.17	0.13	0.09	0.06	0.05	0.04	0.03	0.03	0.02	0.02	0.01	0.01	0.01	0.01	0.01	0.00	0.00	0.00
10.00	88.40	20.56	13.60	10.40	7.37	5.20	3.54	2.33	1.77	1.21	0.89	0.63	0.44	0.34	0.25	0.18	0.12	0.09	0.07	0.06	0.05	0.04	0.03	0.02	0.02	0.02	0.01	0.01	0.01	0.01	0.01	0.00
7.33	67.80	21.51	14.23	10.88	7.71	5.44	3.70	2.43	1.85	1.27	0.93	0.66	0.46	0.36	0.26	0.19	0.13	0.10	0.08	0.07	0.05	0.04	0.03	0.03	0.02	0.02	0.01	0.01	0.01	0.01	0.01	0.00
4.80	45.40	22.00	14.55	11.13	7.88	5.56	3.78	2.49	1.89	1.30	0.96	0.68	0.47	0.36	0.26	0.19	0.13	0.10	0.08	0.07	0.05	0.04	0.03	0.03	0.02	0.02	0.01	0.01	0.01	0.01	0.01	0.00

DISCO DRIVES (KING'S LYNN) LIMITED, OLDMEDOW ROAD, HARDWICK INDUSTRIAL ESTATE, KING'S LYNN, NORFOLK. PE30 4LE.
TEL: +44(0)1553 761331, FAX: +44(0)1553 692137, WEB: www.discodrives.co.uk, EMAIL: sales@discodrives.co.uk

	kW	0.06	0.09	0.12	0.18	0.25	0.37	0.55	0.75	1.10	1.50	2.20	3.00	4.00	5.50	7.50	11.00	15.00	18.50	22.00	30.00	37.00	45.00	55.00	75.00	90.00	110.00	132.00	160.00	200.00	250.00	315.00
RATIO	NM	0.43	0.65	0.85	1.20	1.70	2.50	3.80	5.00	7.30	9.90	14.00	20.00	26.00	36.00	49.00	71.00	97.00	120.00	142.00	194.00	238.00	289.00	354.00	482.00	579.00	707.00	849.00	1029.00	1286.00	1602.00	2019.00
230.00	258.00	2.61	1.73	1.32	0.93	0.66	0.45	0.30	0.22	0.15	0.11	0.08	0.06	0.04	0.03	0.02	0.02	0.01	0.01	0.01	0.01	0.00	0.00	0.00	0.00	0.00	0.00	0.00	0.00	0.00	0.00	0.00
202.27	254.00	2.92	1.93	1.48	1.05	0.74	0.50	0.33	0.25	0.17	0.13	0.09	0.06	0.05	0.03	0.03	0.02	0.01	0.01	0.01	0.01	0.01	0.00	0.00	0.00	0.00	0.00	0.00	0.00	0.00	0.00	0.00
179.17	242.00	3.14	2.08	1.59	1.13	0.79	0.54	0.36	0.27	0.19	0.14	0.10	0.07	0.05	0.04	0.03	0.02	0.01	0.01	0.01	0.01	0.01	0.00	0.00	0.00	0.00	0.00	0.00	0.00	0.00	0.00	0.00
161.54	235.00	3.38	2.24	1.71	1.21	0.86	0.58	0.38	0.29	0.20	0.15	0.10	0.07	0.06	0.04	0.03	0.02	0.01	0.01	0.01	0.01	0.01	0.01	0.00	0.00	0.00	0.00	0.00	0.00	0.00	0.00	0.00
143.10	226.00	3.67	2.43	1.86	1.32	0.93	0.63	0.42	0.32	0.22	0.16	0.11	0.08	0.06	0.04	0.03	0.02	0.02	0.01	0.01	0.01	0.01	0.01	0.00	0.00	0.00	0.00	0.00	0.00	0.00	0.00	0.00
129.03	220.00	3.97	2.62	2.01	1.42	1.00	0.68	0.45	0.34	0.23	0.17	0.12	0.09	0.07	0.05	0.03	0.02	0.02	0.01	0.01	0.01	0.01	0.01	0.00	0.00	0.00	0.00	0.00	0.00	0.00	0.00	0.00
115.00	417.00	8.43	5.58	4.27	3.02	2.13	1.45	0.95	0.73	0.50	0.37	0.26	0.18	0.14	0.10	0.07	0.05	0.04	0.03	0.03	0.02	0.02	0.01	0.01	0.01	0.01	0.01	0.00	0.00	0.00	0.00	0.00
101.14	399.00	9.17	6.07	4.64	3.29	2.32	1.58	1.04	0.79	0.54	0.40	0.28	0.20	0.15	0.11	0.08	0.06	0.04	0.03	0.03	0.02	0.02	0.01	0.01	0.01	0.01	0.01	0.00	0.00	0.00	0.00	0.00
89.58	381.00	9.89	6.54	5.00	3.54	2.50	1.70	1.12	0.85	0.58	0.43	0.30	0.21	0.16	0.12	0.09	0.06	0.04	0.04	0.03	0.02	0.02	0.01	0.01	0.01	0.01	0.01	0.01	0.00	0.00	0.00	0.00
80.77	372.00	10.71	7.09	5.42	3.84	2.71	1.84	1.21	0.92	0.63	0.47	0.33	0.23	0.18	0.13	0.09	0.06	0.05	0.04	0.03	0.02	0.02	0.02	0.01	0.01	0.01	0.01	0.01	0.00	0.00	0.00	0.00
71.55	358.00	11.64	7.70	5.89	4.17	2.94	2.00	1.32	1.00	0.69	0.51	0.36	0.25	0.19	0.14	0.10	0.07	0.05	0.04	0.04	0.03	0.02	0.02	0.01	0.01	0.01	0.01	0.01	0.00	0.00	0.00	0.00
64.52	353.00	12.72	8.42	6.44	4.56	3.22	2.19	1.44	1.09	0.75	0.55	0.39	0.27	0.21	0.15	0.11	0.08	0.06	0.05	0.04	0.03	0.02	0.02	0.02	0.01	0.01	0.01	0.01	0.01	0.00	0.00	0.00
57.35	342.00	13.87	9.17	7.02	4.97	3.51	2.39	1.57	1.19	0.82	0.60	0.43	0.30	0.23	0.17	0.12	0.08	0.06	0.05	0.04	0.03	0.03	0.02	0.02	0.01	0.01	0.01	0.01	0.01	0.00	0.00	0.00
52.78	332.00	14.63	9.68	7.40	5.24	3.70	2.52	1.66	1.26	0.86	0.64	0.45	0.31	0.24	0.17	0.13	0.09	0.06	0.05	0.04	0.03	0.03	0.02	0.02	0.01	0.01	0.01	0.01	0.01	0.00	0.00	0.00
47.37	326.00	16.01	10.59	8.10	5.74	4.05	2.75	1.81	1.38	0.94	0.70	0.49	0.34	0.26	0.19	0.14	0.10	0.07	0.06	0.05	0.04	0.03	0.02	0.02	0.01	0.01	0.01	0.01	0.01	0.01	0.00	0.00
43.75	315.00	16.74	11.08	8.47	6.00	4.24	2.88	1.89	1.44	0.99	0.73	0.51	0.36	0.28	0.20	0.15	0.10	0.07	0.06	0.05	0.04	0.03	0.02	0.02	0.01	0.01	0.01	0.01	0.01	0.01	0.00	0.00
39.53	304.00	17.88	11.83	9.05	6.41	4.52	3.08	2.02	1.54	1.05	0.78	0.55	0.38	0.30	0.21	0.16	0.11	0.08	0.06	0.05	0.04	0.03	0.03	0.02	0.02	0.01	0.01	0.01	0.01	0.01	0.00	0.00
34.78	288.00	19.26	12.74	9.74	6.90	4.87	3.31	2.18	1.66	1.13	0.84	0.59	0.41	0.32	0.23	0.17	0.12	0.09	0.07	0.06	0.04	0.03	0.03	0.02	0.02	0.01	0.01	0.01	0.01	0.01	0.01	0.00
33.35	370.00	25.80	17.07	13.05	9.25	6.53	4.44	2.92	2.22	1.52	1.12	0.79	0.55	0.43	0.31	0.23	0.16	0.11	0.09	0.08	0.06	0.05	0.04	0.03	0.02	0.02	0.02	0.01	0.01	0.01	0.01	0.01
29.33	357.00	28.31	18.73	14.32	10.14	7.16	4.87	3.20	2.43	1.67	1.23	0.87	0.61	0.47	0.34	0.25	0.17	0.13	0.10	0.09	0.06	0.05	0.04	0.03	0.03	0.02	0.02	0.01	0.01	0.01	0.01	0.01
25.98	347.00	31.06	20.55	15.71	11.13	7.86	5.34	3.51	2.67	1.83	1.35	0.95	0.67	0.51	0.37	0.27	0.19	0.14	0.11	0.09	0.07	0.06	0.05	0.04	0.03	0.02	0.02	0.02	0.01	0.01	0.01	0.01
25.00	260.00	24.19	16.00	12.24	8.67	6.12	4.16	2.74	2.08	1.42	1.05	0.74	0.52	0.40	0.29	0.21	0.15	0.11	0.09	0.07	0.05	0.04	0.04	0.03	0.02	0.02	0.01	0.01	0.01	0.01	0.01	0.01
23.42	338.00	33.56	22.20	16.98	12.03	8.49	5.77	3.80	2.89	1.98	1.46	1.03	0.72	0.56	0.40	0.29	0.20	0.15	0.12	0.10	0.07	0.06	0.05	0.04	0.03	0.02	0.02	0.02	0.01	0.01	0.01	0.01
20.75	332.00	37.21	24.62	18.82	13.33	9.41	6.40	4.21	3.20	2.19	1.62	1.14	0.80	0.62	0.44	0.33	0.23	0.16	0.13	0.11	0.08	0.07	0.06	0.05	0.03	0.03	0.02	0.02	0.02	0.01	0.01	0.01
18.71	320.00	39.78	26.31	20.12	14.25	10.06	6.84	4.50	3.42	2.34	1.73	1.22	0.86	0.66	0.48	0.35	0.24	0.18	0.14	0.12	0.09	0.07	0.06	0.05	0.04	0.03	0.02	0.02	0.02	0.01	0.01	0.01
16.63	310.00	43.35	28.67	21.93	15.53	10.96	7.46	4.90	3.73	2.55	1.88	1.33	0.93	0.72	0.52	0.38	0.26	0.19	0.16	0.13	0.10	0.08	0.06	0.05	0.04	0.03	0.03	0.02	0.02	0.01	0.01	0.01
15.31	298.00	45.28	29.95	22.91	16.23	11.45	7.79	5.12	3.89	2.67	1.97	1.39	0.97	0.75	0.54	0.40	0.27	0.20	0.16	0.14	0.10	0.08	0.07	0.06	0.04	0.03	0.03	0.02	0.02	0.02	0.01	0.01
13.74	288.00	48.76	32.25	24.67	17.47	12.33	8.39	5.52	4.19	2.87	2.12	1.50	1.05	0.81	0.58	0.43	0.30	0.22	0.17	0.15	0.11	0.09	0.07	0.06	0.04	0.04	0.03	0.02	0.02	0.02	0.01	0.01
12.69	280.00	51.32	33.95	25.96	18.39	12.98	8.83	5.81	4.41	3.02	2.23	1.58	1.10	0.85	0.61	0.45	0.31	0.23	0.18	0.16	0.11	0.09	0.08	0.06	0.05	0.04	0.03	0.03	0.02	0.02	0.01	0.01
11.47	270.00	54.77	36.23	27.71	19.62	13.85	9.42	6.20	4.71	3.23	2.38	1.68	1.18	0.91	0.65	0.48	0.33	0.24	0.20	0.17	0.12	0.10	0.08	0.07	0.05	0.04	0.03	0.03	0.02	0.02	0.01	0.01
10.09	255.00	58.79	38.89	29.74	21.07	14.87	10.11	6.65	5.06	3.46	2.55	1.81	1.26	0.97	0.70	0.52	0.36	0.26	0.21	0.18	0.13	0.11	0.09	0.07	0.05	0.04	0.04	0.03	0.02	0.02	0.02	0.01
7.25	225.00	72.17	47.75	36.51	25.86	18.26	12.41	8.17	6.21	4.25	3.13	2.22	1.55	1.19	0.86	0.63	0.44	0.32	0.26	0.22	0.16	0.13	0.11	0.09	0.06	0.05	0.04	0.04	0.03	0.02	0.02	0.02
4.83	188.00	90.46	59.84	45.76	32.41	22.88	15.56	10.24	7.78	5.33	3.93	2.78	1.94	1.50	1.08	0.79	0.55	0.40	0.32	0.27	0.20	0.16	0.13	0.11	0.08	0.07	0.06	0.05	0.04	0.03	0.02	0.02

DISCO DRIVES (KING'S LYNN) LIMITED, OLDMEDOW ROAD, HARDWICK INDUSTRIAL ESTATE, KING'S LYNN, NORFOLK. PE30 4LE.
TEL: +44(0)1553 761331, FAX: +44(0)1553 692137, WEB: www.discodrives.co.uk, EMAIL: sales@discodrives.co.uk

	kW	0.06	0.09	0.12	0.18	0.25	0.37	0.55	0.75	1.10	1.50	2.20	3.00	4.00	5.50	7.50	11.00	15.00	18.50	22.00	30.00	37.00	45.00	55.00	75.00	90.00	110.00	132.00	160.00	200.00	250.00	315.00
RATIO	NM	0.43	0.65	0.85	1.20	1.70	2.50	3.80	5.00	7.30	9.90	14.00	20.00	26.00	36.00	49.00	71.00	97.00	120.00	142.00	194.00	238.00	289.00	354.00	482.00	579.00	707.00	849.00	1029.00	1286.00	1602.00	2019.00
234.09	732.00	7.27	4.81	3.68	2.61	1.84	1.25	0.82	0.63	0.43	0.32	0.22	0.16	0.12	0.09	0.06	0.04	0.03	0.03	0.02	0.02	0.01	0.01	0.01	0.01	0.01	0.00	0.00	0.00	0.00	0.00	0.00
202.00	702.00	8.08	5.35	4.09	2.90	2.04	1.39	0.91	0.70	0.48	0.35	0.25	0.17	0.13	0.10	0.07	0.05	0.04	0.03	0.02	0.02	0.01	0.01	0.01	0.01	0.01	0.00	0.00	0.00	0.00	0.00	0.00
179.63	673.00	8.71	5.76	4.41	3.12	2.20	1.50	0.99	0.75	0.51	0.38	0.27	0.19	0.14	0.10	0.08	0.05	0.04	0.03	0.03	0.02	0.02	0.01	0.01	0.01	0.01	0.01	0.00	0.00	0.00	0.00	0.00
160.00	658.00	9.56	6.33	4.84	3.43	2.42	1.65	1.08	0.82	0.56	0.42	0.29	0.21	0.16	0.11	0.08	0.06	0.04	0.03	0.03	0.02	0.02	0.01	0.01	0.01	0.01	0.01	0.00	0.00	0.00	0.00	0.00
143.75	641.00	10.37	6.86	5.25	3.72	2.62	1.78	1.17	0.89	0.61	0.45	0.32	0.22	0.17	0.12	0.09	0.06	0.05	0.04	0.03	0.02	0.02	0.02	0.01	0.01	0.01	0.01	0.01	0.00	0.00	0.00	0.00
128.57	628.00	11.36	7.51	5.75	4.07	2.87	1.95	1.29	0.98	0.67	0.49	0.35	0.24	0.19	0.14	0.10	0.07	0.05	0.04	0.03	0.03	0.02	0.02	0.01	0.01	0.01	0.01	0.01	0.00	0.00	0.00	0.00
112.36	1088.00	22.52	14.90	11.39	8.07	5.70	3.87	2.55	1.94	1.33	0.98	0.69	0.48	0.37	0.27	0.20	0.14	0.10	0.08	0.07	0.05	0.04	0.03	0.03	0.02	0.02	0.01	0.01	0.01	0.01	0.01	0.00
96.96	1062.00	25.47	16.85	12.89	9.13	6.44	4.38	2.88	2.19	1.50	1.11	0.78	0.55	0.42	0.30	0.22	0.15	0.11	0.09	0.08	0.06	0.05	0.04	0.03	0.02	0.02	0.02	0.01	0.01	0.01	0.01	0.01
86.22	1022.00	27.57	18.24	13.94	9.88	6.97	4.74	3.12	2.37	1.62	1.20	0.85	0.59	0.46	0.33	0.24	0.17	0.12	0.10	0.08	0.06	0.05	0.04	0.03	0.02	0.02	0.02	0.01	0.01	0.01	0.01	0.01
76.80	991.00	30.01	19.85	15.18	10.75	7.59	5.16	3.40	2.58	1.77	1.30	0.92	0.65	0.50	0.36	0.26	0.18	0.13	0.11	0.09	0.07	0.05	0.04	0.04	0.03	0.02	0.02	0.02	0.01	0.01	0.01	0.01
69.00	954.00	32.15	21.27	16.27	11.52	8.13	5.53	3.64	2.77	1.89	1.40	0.99	0.69	0.53	0.38	0.28	0.19	0.14	0.12	0.10	0.07	0.06	0.05	0.04	0.03	0.02	0.02	0.02	0.01	0.01	0.01	0.01
61.71	919.00	34.63	22.91	17.52	12.41	8.76	5.96	3.92	2.98	2.04	1.50	1.06	0.74	0.57	0.41	0.30	0.21	0.15	0.12	0.10	0.08	0.06	0.05	0.04	0.03	0.03	0.02	0.02	0.01	0.01	0.01	0.01
55.58	879.00	36.78	24.33	18.61	13.18	9.30	6.33	4.16	3.16	2.17	1.60	1.13	0.79	0.61	0.44	0.32	0.22	0.16	0.13	0.11	0.08	0.07	0.05	0.04	0.03	0.03	0.02	0.02	0.02	0.01	0.01	0.01
50.40	870.00	40.14	26.56	20.31	14.38	10.15	6.90	4.54	3.45	2.36	1.74	1.23	0.86	0.66	0.48	0.35	0.24	0.18	0.14	0.12	0.09	0.07	0.06	0.05	0.04	0.03	0.02	0.02	0.02	0.01	0.01	0.01
45.77	826.00	41.97	27.77	21.23	15.04	10.62	7.22	4.75	3.61	2.47	1.82	1.29	0.90	0.69	0.50	0.37	0.25	0.19	0.15	0.13	0.09	0.08	0.06	0.05	0.04	0.03	0.03	0.02	0.02	0.01	0.01	0.01
42.13	813.00	44.87	29.69	22.70	16.08	11.35	7.72	5.08	3.86	2.64	1.95	1.38	0.96	0.74	0.54	0.39	0.27	0.20	0.16	0.14	0.10	0.08	0.07	0.05	0.04	0.03	0.03	0.02	0.02	0.02	0.01	0.01
38.00	778.00	47.61	31.50	24.09	17.06	12.04	8.19	5.39	4.09	2.80	2.07	1.46	1.02	0.79	0.57	0.42	0.29	0.21	0.17	0.14	0.11	0.09	0.07	0.06	0.04	0.04	0.03	0.02	0.02	0.02	0.01	0.01
35.29	755.00	49.75	32.91	25.17	17.83	12.58	8.56	5.63	4.28	2.93	2.16	1.53	1.07	0.82	0.59	0.44	0.30	0.22	0.18	0.15	0.11	0.09	0.07	0.06	0.04	0.04	0.03	0.03	0.02	0.02	0.01	0.01
33.94	812.00	55.63	36.80	28.14	19.94	14.07	9.57	6.30	4.78	3.28	2.42	1.71	1.20	0.92	0.66	0.49	0.34	0.25	0.20	0.17	0.12	0.10	0.08	0.07	0.05	0.04	0.03	0.03	0.02	0.02	0.01	0.01
29.29	778.00	61.77	40.86	31.25	22.13	15.62	10.62	6.99	5.31	3.64	2.68	1.90	1.33	1.02	0.74	0.54	0.37	0.27	0.22	0.19	0.14	0.11	0.09	0.08	0.06	0.05	0.04	0.03	0.03	0.02	0.02	0.01
26.05	768.00	68.57	45.36	34.69	24.57	17.34	11.79	7.76	5.90	4.04	2.98	2.11	1.47	1.13	0.82	0.60	0.42	0.30	0.25	0.21	0.15	0.12	0.10	0.08	0.06	0.05	0.04	0.03	0.03	0.02	0.02	0.01
23.20	745.00	74.68	49.40	37.78	26.76	18.89	12.84	8.45	6.42	4.40	3.24	2.29	1.61	1.24	0.89	0.66	0.45	0.33	0.27	0.23	0.17	0.13	0.11	0.09	0.07	0.06	0.05	0.04	0.03	0.02	0.02	0.02
20.84	721.00	80.44	53.22	40.69	28.83	20.35	13.84	9.10	6.92	4.74	3.49	2.47	1.73	1.33	0.96	0.71	0.49	0.36	0.29	0.24	0.18	0.15	0.12	0.10	0.07	0.06	0.05	0.04	0.03	0.03	0.02	0.02
18.64	701.00	87.45	57.85	44.24	31.33	22.12	15.04	9.90	7.52	5.15	3.80	2.69	1.88	1.45	1.04	0.77	0.53	0.39	0.31	0.26	0.19	0.16	0.13	0.11	0.08	0.06	0.05	0.04	0.04	0.03	0.02	0.02
16.79	671.00	92.94	61.49	47.02	33.30	23.51	15.99	10.52	7.99	5.47	4.04	2.85	2.00	1.54	1.11	0.82	0.56	0.41	0.33	0.28	0.21	0.17	0.14	0.11	0.08	0.07	0.06	0.05	0.04	0.03	0.02	0.02
15.23	645.00	98.52	65.18	49.84	35.30	24.92	16.95	11.15	8.47	5.80	4.28	3.03	2.12	1.63	1.18	0.86	0.60	0.44	0.35	0.30	0.22	0.18	0.15	0.12	0.09	0.07	0.06	0.05	0.04	0.03	0.03	0.02
13.83	619.00	104.12	68.88	52.67	37.31	26.34	17.91	11.78	8.95	6.13	4.52	3.20	2.24	1.72	1.24	0.91	0.63	0.46	0.37	0.32	0.23	0.19	0.15	0.13	0.09	0.08	0.06	0.05	0.04	0.03	0.03	0.02
12.73	597.00	109.08	72.16	55.18	39.09	27.59	18.76	12.34	9.38	6.43	4.74	3.35	2.35	1.80	1.30	0.96	0.66	0.48	0.39	0.33	0.24	0.20	0.16	0.13	0.10	0.08	0.07	0.06	0.05	0.04	0.03	0.02
11.48	577.00	116.90	77.33	59.14	41.89	29.57	20.11	13.23	10.05	6.89	5.08	3.59	2.51	1.93	1.40	1.03	0.71	0.52	0.42	0.35	0.26	0.21	0.17	0.14	0.10	0.09	0.07	0.06	0.05	0.04	0.03	0.02
10.66	557.00	121.49	80.37	61.46	43.54	30.73	20.90	13.75	10.45	7.16	5.28	3.73	2.61	2.01	1.45	1.07	0.74	0.54	0.44	0.37	0.27	0.22	0.18	0.15	0.11	0.09	0.07	0.06	0.05	0.04	0.03	0.03
4.83	379.00	182.36	120.64	92.25	65.34	46.13	31.37	20.64	15.68	10.74	7.92	5.60	3.92	3.02	2.18	1.60	1.10	0.81	0.65	0.55	0.40	0.33	0.27	0.22	0.16	0.14	0.11	0.09	0.08	0.06	0.05	0.04

DISCO DRIVES (KING'S LYNN) LIMITED, OLDMEDOW ROAD, HARDWICK INDUSTRIAL ESTATE, KING'S LYNN, NORFOLK. PE30 4LE.
TEL: +44(0)1553 761331, FAX: +44(0)1553 692137, WEB: www.discodrives.co.uk, EMAIL: sales@discodrives.co.uk

TYPICAL LOAD CLASSIFICATIONS

APPLICATION	LOAD CLASS
AGITATORS	
PURE LIQUIDS	UNIFORM
LIQUIDS AND SOLIDS	MODERATE
BLOWERS	
CENTRIFUGAL, VANE	UNIFORM
LOBE	MODERATE
BREWING	
BOTTLING MACHINERY	UNIFORM
BREW KETTLES, COOKERS, MASH TUBS	UNIFORM
SCALE HOPPERS	MODERATE
CAN FILLING MACHINERY	UNIFORM
CLARIFIERS	UNIFORM
CLAY WORKING MACHINERY	
BRICK PRESS	HEAVY
BRIQUETTE MACHINE	HEAVY
PUG MILL	MODERATE
COMPRESSORS	
CENTRIFUGAL	UNIFORM
LOBE	MODERATE
RECIPROCATING (MULTI-CYLINDER)	MODERATE
RECIPROCATING (SINGLE CYLINDER)	HEAVY
CONVEYORS (UNIFORM LOADED OR FED)	
APRON, BELT, BUCKET, CHAIN, SCREW	UNIFORM
CONVEYORS (NOT UNIFORMLY LOADED OR FED)	
APRON, BELT, BUCKET, CHAIN, SCREW	MODERATE
RECIPROCATING, SHAKER	HEAVY
CANES	
MAIN HOISTS, AUXILIARY	UNIFORM
DRY DOCK (ROOM LUFFING)	UNIFORM
DRY DOCK (TRACKING DRIVE WHEEL)	MODERATE
CRUSHERS	
ORE, STONE	HEAVY
DREDGERS	
CABLE REELS, WINCHES, CONVEYORS	MODERATE
CUTTER HEAD DRIVES, JIG DRIVES	HEAVY
SCREEN DRIVES	HEAVY
ELEVATORS	
BUCKET (UNIFORMLY LOADED)	UNIFORM
BUCKET (NOT UNIFORMLY LOADED)	MODERATE
CENTRIFUGAL AND GRAVITY DISCHARGE	UNIFORM
ESCALATORS	UNIFORM
FREIGHT	MODERATE
EXTRUDERS (PLASTIC)	
FILM, SHEET, COATING, ROD, TUBING	MODERATE
PRE-PLASTICIZERS, BLOW MOULDERS	HEAVY
FANS	
CENTRIFUGAL AND SMALL INDUSTRIAL	UNIFORM
FORCED, INDUCED DRAFT	MODERATE
LARGE INDUSTRIAL AND MINE	MODERATE
FOOD INDUSTRY	
CEREAL COOKER	UNIFORM
BEET SLICER, DOUGH, MIXER, MEAT GRINDER	MODERATE
GENERATORS (NOT WELDING)	UNIFORM
HAMMER MILLS	HEAVY
HOISTS	
SKIP, MEDIUM DUTY	MODERATE
HEAVY DUTY	HEAVY
LAUNDRY WASHERS AND TUMBLERS	MODERATE
LINE SHAFTS	
DRIVING PROCESSING EQUIPMENT	MODERATE
LIGHT DUTY	UNIFORM

APPLICATION	LOAD CLASS
LUMBER INDUSTRY	
BARKERS, SPINDLE FED	MODERATE
BARKERS MAIN FEET	HEAVY
BURNER CONVEYOR	MODERATE
MAIN LOG AND SLAB CONVEYOR	MODERATE
MERRY-GO-ROUND AND TRANSFER CONVEYOR	MODERATE
CHAINS, FLOOR AND GREEN	MODERATE
CUT-OFF SAWS, CHAIN AND DRAG	MODERATE
GANG FEEDS	HEAVY
EDGE AND TRIMMER FEEDS	MODERATE
PLANER FEED AND TILTING HOIST	MODERATE
TIPPLE HOIST	MODERATE
CRANE WAY TRANSFERS	MODERATE
TRAY DRIVES	MODERATE
LOG DECK	HEAVY
LOG HAULS AND TURNING DEVICES	HEAVY
SORTING TABLE	MODERATE
ROLL CASES	HEAVY
DEBARKING DRUMS	HEAVY
MACHINE TOOLS	
BENDING AND ROLLING	MODERATE
PUNCH PRESS, PLATE PLANERS	HEAVY
TAPPING MACHINE	HEAVY
METAL MILLS	
DRAW BENCH, CARRIAGE AND MAIN DRIVE	MODERATE
PINCH, DRYER, SCRUBBER ROLLS REVERSING SLITTERS	MODERATE
WIRE DRAWING, FLATTENING AND WINDING MACHINES	MODERATE
MILLS (ROTARY TYPE)	
BALL, PEBBLE	HEAVY
CEMENT KILNS	HEAVY
DRYERS, COOLERS	HEAVY
TUMBLING BARRELS	HEAVY
MIXERS	
CONCRETE	MODERATE
CONSTANT DENSITY	UNIFORM
VARIABLE DENSITY	MODERATE
OIL INDUSTRY	
CHILLERS	MODERATE
PARAFFIN FILTER PRESS	MODERATE
ROTARY KILNS	MODERATE
PAPER MILLS	
AGITATORS (MIXERS)	MODERATE
BARKER (MECHANICAL AND HYDRAULIC)	MODERATE
BARKING DRUM	HEAVY
BEATER AND PULPER	MODERATE
BLEACHER	UNIFORM
CALENDARS	MODERATE
CONVERTING MACHINES	MODERATE
COUCH	MODERATE
CUTTERS, PLATTERS	HEAVY
CYLINDERS, DRYERS	MODERATE
FELT STRETCHER	MODERATE
FELT WHIPPER, JORDANS	HEAVY
PRESSERS	UNIFORM
PULP MACHINE REEL	MODERATE
STOCK CHEST	MODERATE
SUCTION ROLL	UNIFORM
WASHERS AND THICKENERS	MODERATE

APPLICATION	LOAD CLASS
WINDERS	UNIFORM
PUMPS	
CENTRIFUGAL	UNIFORM
PROPORTIONING, RECIPROCATING	MODERATE
ROTARY, SINGLE AND DOUBLE ACTING	MODERATE
GEAR, LOBE, VANE	UNIFORM
RUBBER/PLASTIC INDUSTRY	
LABORATORY EQUIPMENT	MODERATE
MIXING MILLS, REFINERS	HEAVY
RUBBER CALENDARS	HEAVY
WARMING MILLS	HEAVY
RUBBER MILLS	MODERATE
SAND MULLER	MODERATE
SEWAGE DISPOSAL MACHINES	
BIG SCREENS, COLLECTOR	UNIFORM
CHEMICAL FEEDERS	UNIFORM
DEWATERING SCREWS	MODERATE
SCUM BREAKERS	MODERATE
SLOW OR RAPID MIXERS	MODERATE
THICKENERS	MODERATE
VACUUM FILTERS	MODERATE
SCREENS	
AIR WASHING	UNIFORM
ROTARY STONE OR GRAVEL	MODERATE
STOKERS	UNIFORM
SUGAR INDUSTRY	
CANE KNIVES	HEAVY
CRUSHERS, MILLS	HEAVY
TEXTILE INDUSTRY	
BATCHERS, CARDS	MODERATE
DRY CANS, DRYERS	MODERATE
DYEING MACHINERY	MODERATE
LOOMS, MANGLES	MODERATE
SLASHERS, SOAPERS, SPINNERS	MODERATE
WINDERS	MODERATE

INTENTIONALLY LEFT BLANK